Dell PowerEdge R6615

Technical Guide

Regulatory Model: E97S
Regulatory Type: E97S001
May 2023
Rev. A01

DELL Technologies

Notes, cautions, and warnings

NOTE: A NOTE indicates important information that helps you make better use of your product.

CAUTION: A CAUTION indicates either potential damage to hardware or loss of data and tells you how to avoid the problem.

WARNING: A WARNING indicates a potential for property damage, personal injury, or death.

© 2023 Dell Inc. or its subsidiaries. All rights reserved. Dell Technologies, Dell, and other trademarks are trademarks of Dell Inc. or its subsidiaries. Other trademarks may be trademarks of their respective owners.

Contents

Chapter 1: System overview **5**
Key workloads 5
New technologies 5

Chapter 2: System features and generational comparison **7**

Chapter 3: Chassis views and features **10**
Front view of the system 10
Rear view of the system 11
Inside the system 12
Quick Resource Locator 17

Chapter 4: Processor **18**
Processor features 18

Chapter 5: Memory subsystem **19**
Supported memory 19

Chapter 6: Storage **20**
Storage controllers 20
Supported Drives 20
Internal storage configuration 21
External Storage 22

Chapter 7: Networking **23**
Overview 23
OCP 3.0 support 23
Supported OCP cards 23
OCP NIC 3.0 vs. rack Network Daughter Card comparisons 24

Chapter 8: PCIe subsystem **25**
PCIe risers 25

Chapter 9: Power, thermal, and acoustics **31**
Power 31
Power Supply Units 32
Thermal 33
Thermal design 33
Acoustics 34
Acoustical performance 34
PowerEdge acoustical specifications 35

Chapter 10: Rack, rails, and cable management **43**

Rails and cable management information....43

Chapter 11: Operating Systems and Virtualization.... 52
Supported Operating Systems....52

Chapter 12: Dell OpenManage Systems Management....53
Integrated Dell Remote Access Controller (iDRAC)....53
Systems Management software support matrix.... 54

Chapter 13: Appendix D: Service and support.... 56
Default support levels.... 56
Default deployment levels.... 56
Other services and support information....56
Dell deployment services....56
Dell custom deployment Services.... 60
Dell Residency Services.... 60
Dell Data Migration Services.... 60
Dell Enterprise Support Services....61
Enterprise connectivity.... 63
Dell TechDirect....64
Dell Technologies Consulting Services....64

Chapter 14: Appendix A. Additional specifications.... 66
Chassis dimensions 66
System weight.... 67
NIC port specifications....67
Video specifications.... 67
USB ports specifications.... 68
PSU rating....69
Environmental specifications....70
Cooling components.... 72
Thermal restriction matrix.... 72
Thermal air restrictions.... 74

Chapter 15: Appendix B. Standards compliance.... 76

Chapter 16: Appendix C Additional resources....77

1

System overview

The PowerEdge R6615 system is a 1U server that supports:

- One AMD EPYC 4th Generation 9004 series processor with up to 128 cores
- 12 DDR5 DIMM slots, supports maximum 3 TB
- Two redundant AC or DC power supply units
- Up to 10 x 2.5-inch SAS/SATA/NVMe drives or 8 x 2.5-inch NVMe SSD drives or 4 x 3.5-inch SATA/SAS drives or 2 x 2.5-inch (rear) SAS/SATA (HDD/SSD) drives
- Up to 16 x E3.S NVMe Gen5 or 14 x E3.S NVMe Gen5 or 2 x E3.S (rear) NVMe Gen5 direct drives
- PCI Express® (PCIe) 5.0 enabled expansion slots
- Network interface technologies to cover Network Interface Card (NIC)
- Optional Direct Liquid Cooling for required CPUs and/or configurations

NOTE: For more information about how to hot swap NVMe PCIe SSD U.2 device, see the *Dell Express Flash NVMe PCIe SSD User's Guide* at https://www.dell.com/support **> Browse all Products** > **Data Center Infrastructure** > **Storage Adapters & Controllers** > **Dell PowerEdge Express Flash NVMe PCIe SSD** > **Documentation** > **Manuals and Documents**.

NOTE: All instances of SAS, SATA drives are referred to as drives in this document, unless specified otherwise.

CAUTION: Do not install GPUs, network cards, or other PCIe devices on your system that are not validated and tested by Dell. Damage caused by unauthorized and invalidated hardware installation will null and void the system warranty.

Topics:

- Key workloads
- New technologies

Key workloads

Customers looking for accelerated compute to maximize performance in a dense, scalable server architecture to address the following applications:

- High Performance Computing
- Virtual Desktop Infrastructure (VDI)
- Virtualization

New technologies

Table 1. New technologies

Technology	Detailed Description
AMD Genoa Processor (SP5)	Core count: Up to 128 core processor
	5nm process technology
	AMD Inter-chip global memory interconnect (xGMI) up to 64 lanes
	Speeds up to 4.1 GHz
	Maximum TDP: 400 W
4800 MT/s DDR5 Memory	Up to 12 channels with 1 DPC per CPU and 12 DIMMs in total

Table 1. New technologies (continued)

Technology	Detailed Description
	Supports DDR5 ECC RDIMM
PCIe Gen	Gen5 @32 GT/s
PCIe Slot	Up to three PCIe Slots with x 8 or x 16 lanes
Flex I/O	LOM board, 2 x1Gb with BCM5720 LAN controller (optional)
	Rear I/O with: ● 1 x Dedicated iDRAC ethernet port ● 1 x USB 3.0 ● 1 x USB 2.0 ● 1 x VGA (optional for Direct Liquid Cooling configuration)
	Serial Port Option with STD RIO board
	OCP Mezz 3.0 (supported by x8 PCIe lanes) (optional)
	Front I/O with: ● 1 x iDRAC Direct (Micro-AB USB) port ● 1 x USB 2.0 ● 1x VGA
CPLD 1-wire	Support payload data of Front PERC, Riser, BOSS N1, BP and Rear IO to BIOS and iDRAC
Dedicated PERC	PERC 11 ● HBA355i, H355, H755, H755N PERC 12 ● H965i
Software RAID	S160
Power Supplies	60 mm dimension is the same PSU form factor with 15G on 16G design
	Titanium 700 W AC/HVDC
	Platinum 800 W AC/HVDC
	Titanium 1100 W AC/HVDC
	Platinum 1400 W AC/HVDC
	Titanium 1800 W AC/HVDC

2

System features and generational comparison

The following table shows the comparison between the PowerEdge R6615 with the PowerEdge R6515.

Table 2. Features comparison

Features	PowerEdge R6615	PowerEdge R6515
Processors	One AMD® EPYC 4th Generation Genoa (SP5) processor	One AMD® EPYC™ 3rd Generation Rome (SP3) processor
Processor interconnect	Inter-chip global memory interconnect (xGMI) 32 GT/sec	Inter-chip global memory interconnect (xGMI) 16 GT/s
Memory	12 x DDR5 RDIMM (3 TB), bandwidth up to 4800 MT/S	16 x DDR4 RDIMM (1TB), LRDIMM (2TB), bandwidth up to 3200 MT/S
Storage Controllers	• PERC: HBA355i, H355, H755, H755N, H965i • External adapters: HBA355e • Software RAID: S160 • BOSS-N1	• PERC: HBA330, H330, H730P • External adapter: H840, HBA355e • Software RAID: S150 • BOSS S1
Drive Bays	Front bays: • Up to 4 x 3.5-inch SAS/SATA (HDD/SSD) max 80 TB • Up to 8 x 2.5-inch NVMe SSD max 122.88 TB • Up to 10 x 2.5-inch SAS/SATA/NVMe (HDD/SSD) max 153.6 TB • Up to 14 x E3.S (NVMe Gen5) max 89.6 TB • Up to 16 x E3.S (NVMe Gen5) max 102.4 TB Rear bays: • Up to 2 x 2.5-inch SAS/SATA (HDD/SSD) max 30.72 TB • Up to 2 x E3.S (NVMe Gen5) max 12.8 TB	Front bays: • Up to 4 x 3.5-inch SAS/SATA (HDD/SSD) max 64 TB • Up to 8 x 2.5-inch SAS/SATA (HDD/SSD) max 19.2 TB • Up to 10 x 2.5-inch NVMe max 76.8 TB Rear bay: • N/A
Power Supplies	• 1800 W Titanium 200-240 VAC or 240 HVDC • 1400 W Platinum 100-240 VAC or 240 HVDC • 1100 W Titanium 100-240 VAC or 240 HVDC • 1100 W LVDC -48 - -60 VDC • 800 W Platinum 100-240 VAC or 240 HVDC • 700 W Titanium 200-240 VAC or 240 HVDC Hot swap PSUs with full redundancy.	• 700 W Platinum 100-240 VAC or 240 HVDC • 5500 W Platinum 200-240 VAC or 240 HVDC Hot swap PSUs with full redundancy.
Cooling Options	• Air Cooling • Optional Direct Liquid Cooling (DLC)	• Air Cooling

Table 2. Features comparison (continued)

Features	PowerEdge R6615	PowerEdge R6515
	NOTE: DLC is a rack solution and requires rack manifolds and a cooling distribution unit (CDU) to operate.	
Fans	Up to four sets (dual fan module) Standard (STD) / High Performance Gold (HPR Gold) hot plug fans	Up to three sets (dual fan module) Standard (STD) / High performance (HPR) hot plug fans
Dimension	Height: 42.8 mm (1.685 inches)	Height: 42.8 mm (1.685 inches)
	Width: 482 mm (18.97 inches)	Width: 482 mm (18.97 inches)
	Depth: 772.13 mm (30.39 inches) with bezel	Depth: 728.46 mm (28.67 inches) with bezel
	Depth: 758.29 mm (29.85 inches) without bezel	Depth: 714.62 mm (28.13 inches) without bezel
Form Factor	1U rack server	1U rack server
Embedded Management	• iDRAC9 • iDRAC Direct • iDRAC RESTful API with Redfish • iDRAC Service Manual • Quick Sync 2 wireless module	• iDRAC9 • iDRAC Direct • iDRAC RESTful API with Redfish • iDRAC Service Manual • Quick Sync 2 wireless module
Bezel	Optional LCD bezel or security bezel	Optional LCD bezel or security bezel
OpenManage Software	• OpenManage Enterprise • OpenManage Power Manager plug-in • OpenManage Services plug-in • OpenManage Update Manager plug-in	• OpenManage Enterprise • OpenManage Power Manager plug-in • OpenManage Services plug-in • OpenManage Update Manager plug-in
Mobility	OpenManage Mobile	OpenManage Mobile
Integrations and Connections	OpenManage Integrations • Microsoft System Center • Red Hat Ansible Modules • VMware vCenter and vRealize Operations Manager	OpenManage Integrations • Microsoft System Center • Red Hat Ansible Modules • VMware vCenter OpenManage Connections • Micro Focus Operations Manager
Security	• AMD Secure Encrypted Virtualization (SEV) • AMD Secure Memory Encryption (SME) • Cryptographically signed firmware • Data at Rest Encryption (SEDs with local or external key mgmt) • Secure Boot • Secure Erase • Secured Component Verification (Hardware integrity check) • Silicon Root of Trust • System Lockdown (requires iDRAC9 Enterprise or Datacenter) • TPM 2.0 FIPS, CC-TCG certified, TPM 2.0 China NationZ	• AMD Secure Encrypted Virtualization (SEV) • AMD Secure Memory Encryption (SME) • Cryptographically signed firmware • Secure Boot • Secure Erase • Silicon Root of Trust • System Lockdown (requires iDRAC9 Enterprise or Datacenter) • TPM 1.2/2.0 FIPS, CC-TCG certified, TPM 2.0 China NationZ
Embedded NIC	2 x 1GbE LOM card (optional)	2 x 1GbE LOM card (optional)
Networking Options	1 x OCP card 3.0 (optional)	1 x OCP 3.0 (optional)

Table 2. Features comparison (continued)

Features	PowerEdge R6615		PowerEdge R6515	
	NOTE: The system allows either LOM card or OCP card or both to be installed in the system.		**NOTE:** The system allows either LOM card or OCP card or both to be installed in the system.	
GPU Options	Up to 2 x 75 W (SW)		Up to 2 x 70 W (SW)	
Ports	Front Ports • 1 x Dedicated iDRAC micro-USB • 1 x USB 2.0 • 1 x VGA	Rear Ports • 1 x USB 2.0 • 1 x iDRAC Direct/ ethernet port • 1 x USB 3.0 • 1 x VGA (optional for liquid cooling configuration)	Front Ports • 1 x Dedicated iDRAC micro-USB • 1 x USB 2.0 • 1 x VGA	Rear Ports • 1 x iDRAC Direct/ ethernet port • 2 x USB 3.0 • 1 x Serial port (optioanl) • 1 x VGA
	Internal Port: 1 x USB 3.0		Internal Port: 1 x USB 3.0	
PCIe	Up to three PCIe slots • 2 x PCIe Gen5 slots • 3 x PCIe Gen4 slots		Up to two PCIe slots • 1 x PCIe Gen 4 slots • 1 x PCIe Gen 3 slots	
Operating System and Hypervisors	• Canonical Ubuntu Server LTS • Microsoft Windows Server with Hyper-V • Red Hat Enterprise Linux • SUSE Linux Enterprise Server • VMware ESXi For specifications and interoperability details, see Dell Enterprise Operating Systems on Servers, Storage, and Networking page at Dell.com/OSsupport.		• Canonical Ubuntu Server LTS • Citrix Hypervisor • Windows Server LTSC with Hyper-V • Red Hat Enterprise Linux • SUSE Linux Enterprise Server • VMware ESXi For specifications and interoperability details, see Dell Enterprise Operating Systems on Servers, Storage, and Networking page at Dell.com/OSsupport.	

3

Chassis views and features

Topics:

- Front view of the system
- Rear view of the system
- Inside the system
- Quick Resource Locator

Front view of the system

Figure 1. Front view of 4 x 3.5-inch drive system

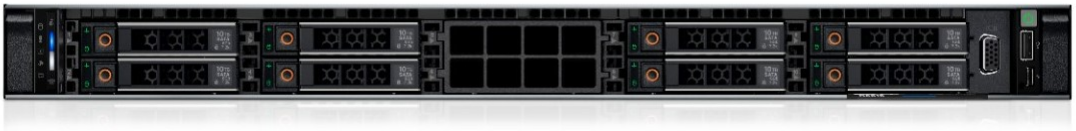

Figure 2. Front view of 8 x 2.5-inch drive system

Figure 3. Front view of 10 x 2.5-inch drive system

Figure 4. Front view of 14 x E3.S drive system

Figure 5. Front view of 16 x E3.S drive system

Rear view of the system

Figure 6. Rear view of the system with no risers

Figure 7. Rear view of the system with 2 x 2.5-inch rear drive system

Figure 8. Rear view of the system with Direct Liquid Cooling module

Figure 9. Rear view of the system with 2 x E3.S rear drive system

Inside the system

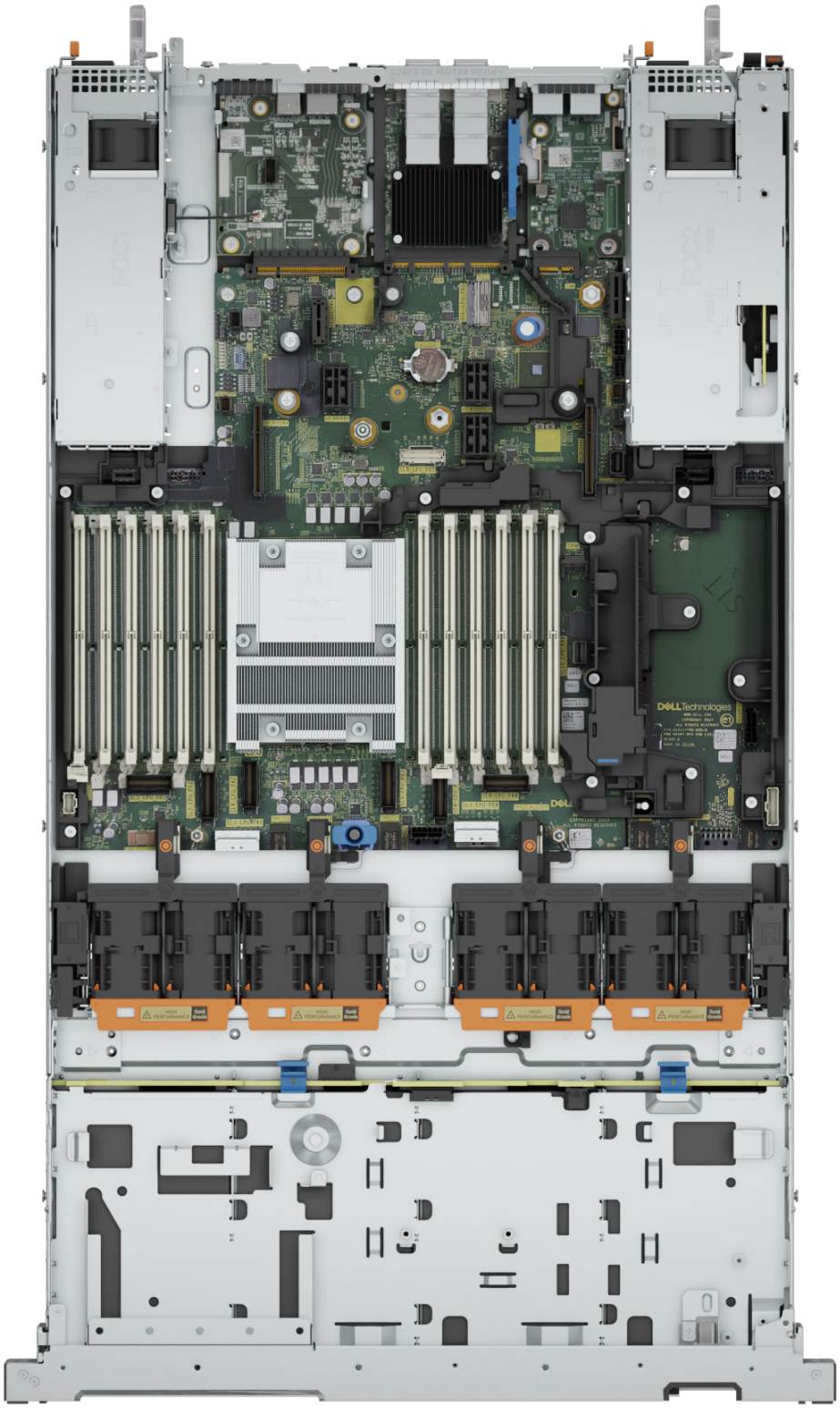

Figure 10. Inside the system with no Risers

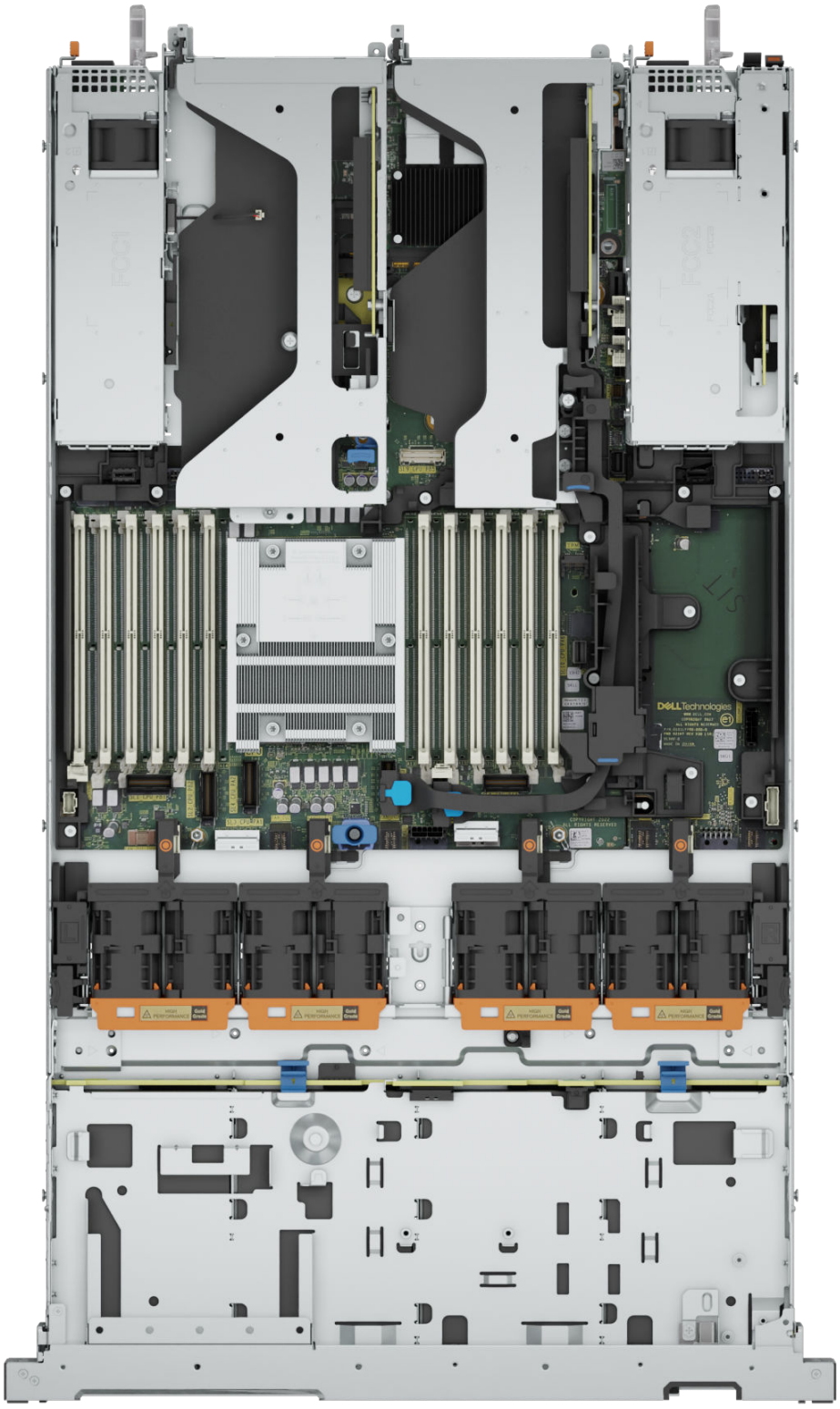

Figure 11. Inside the system with Risers

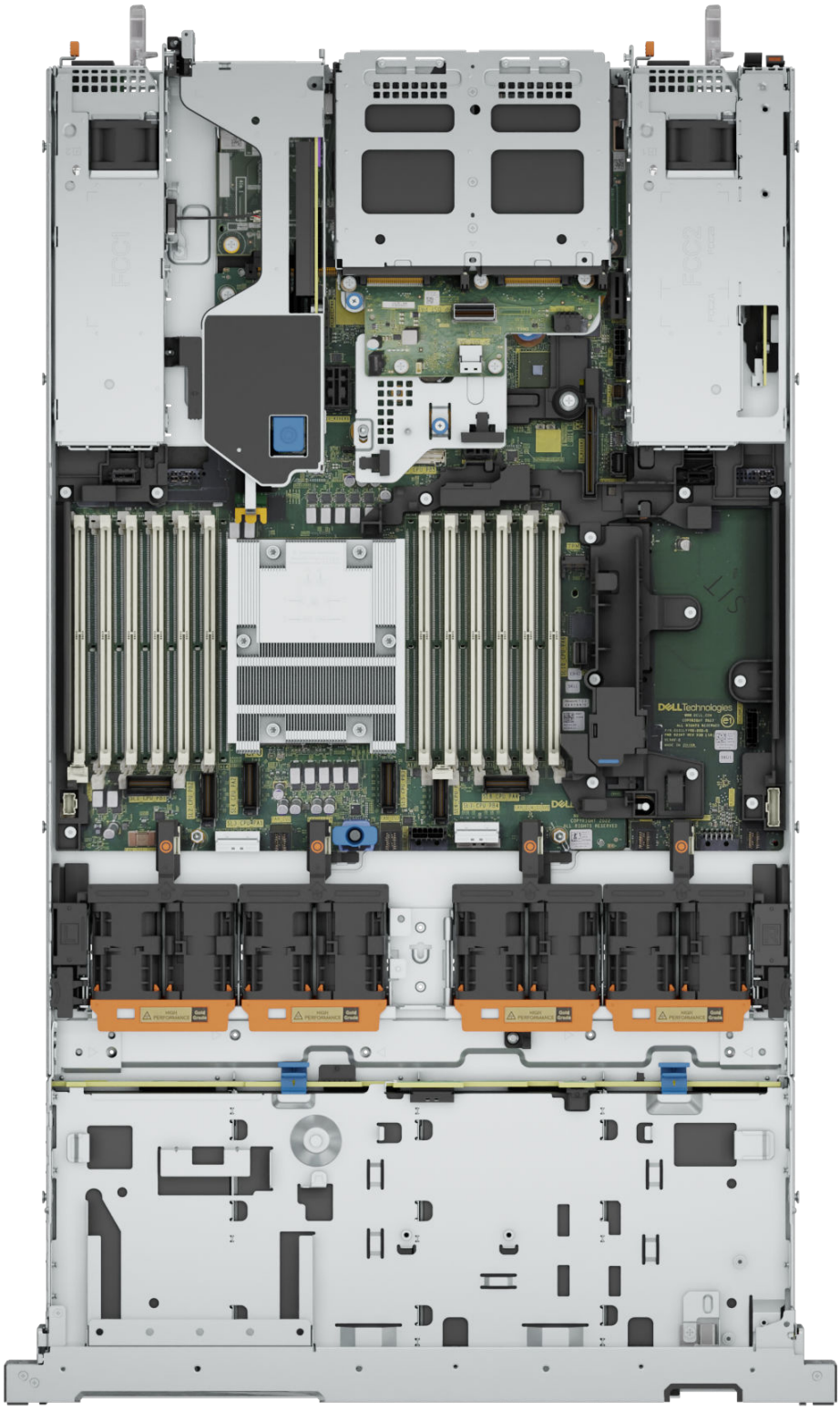

Figure 12. Inside the system with Risers + Rear 2 x 2.5-inch module

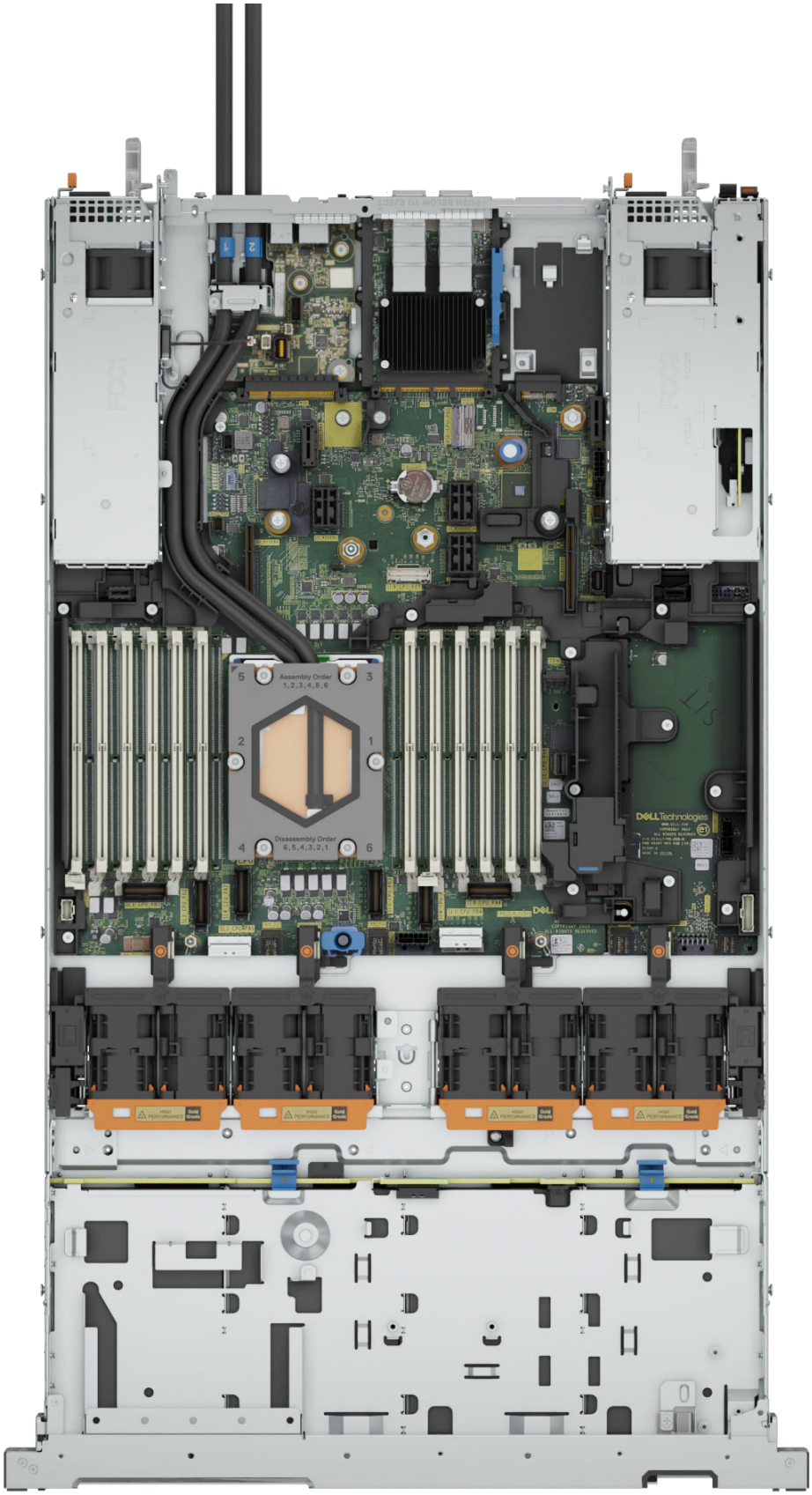

Figure 13. Inside the system with Direct Liquid Cooling module

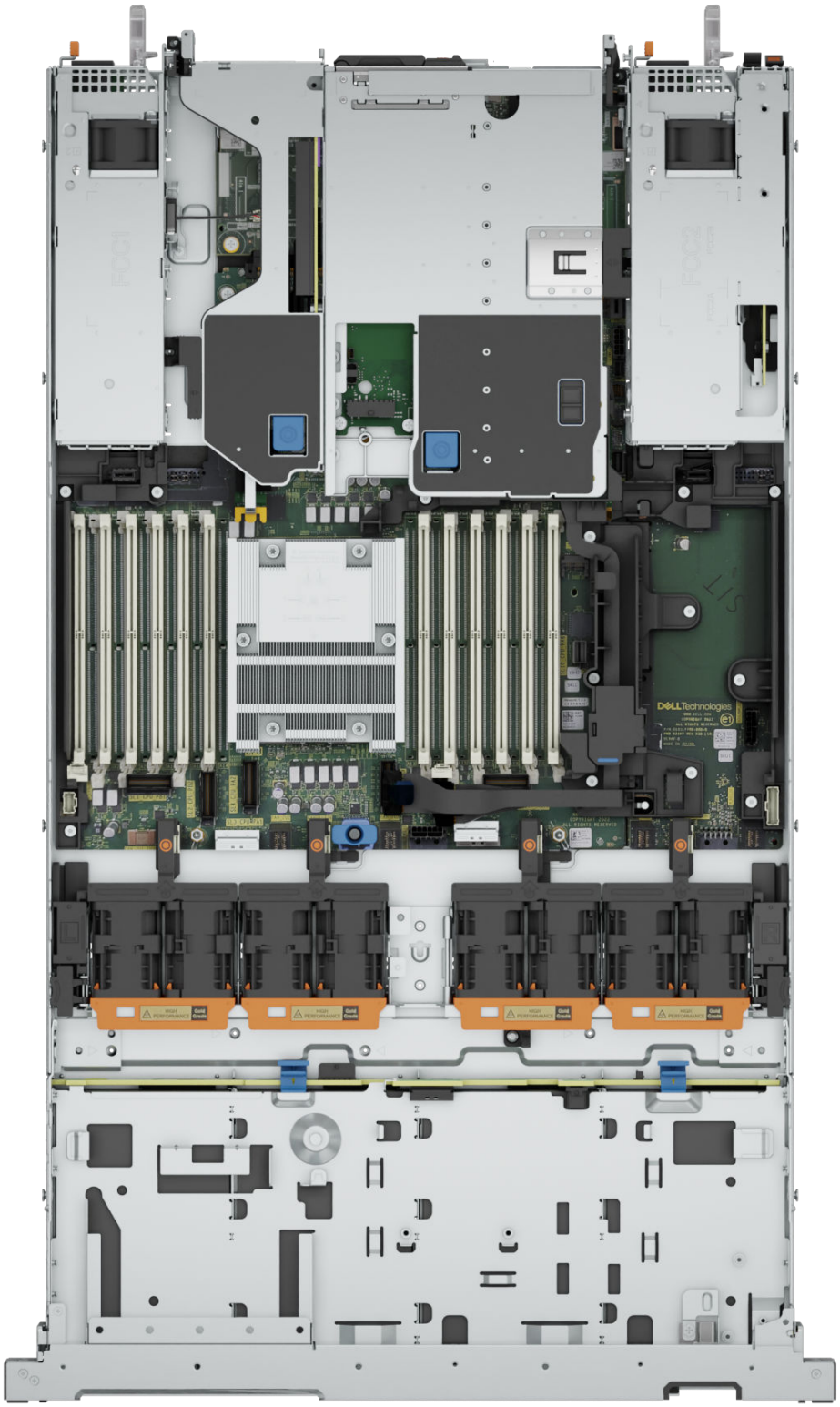

Figure 14. Inside the system with Risers + Rear 2 x E3.S

Quick Resource Locator

The QRL on everything (SILs, GSG, Installation and Service Manual except on the EST) is a generic QRL for R6615 that leads to a webpage for that product. That webpage has links for things like setup and service videos, iDRAC manual, and other things that apply to the platform. The QRL on the EST is unique and specific to that service tag and will contain the Service Tag number and the iDRAC password. The label and the QRL code within it are printed on demand at the L10 factories. This QRL links to a webpage that shows the exact configuration as built for that customer, and the specific warranty purchased. It is one click away from the same content of generic information that applies to R6615 that is available in the other QRLs.

Figure 15. R6615 Quick Resource Locator

4

Processor

Topics:

- Processor features

Processor features

The AMD EPYC™9004 Series Processor ("Genoa") is the 4th Generation AMD EPYC™ System on a chip (SOC) supporting the modern data center. The AMD EPYC™ 9004 Series Processor is based on AMD's SP5 compatible socket infrastructure with a new BIOS. AMD EPYC™9004 Series Processor is not drop-in compatible to AMD's SP3 socket infrastructure for EPYC™ Series 7002 ("Rome") and 7003 ("Milan") Processors. Based on AMD's "Zen4" and "Zen4c" cores, integrated I/O controllers, up to 32 MB of L3 cache per core, advanced security, and synchronized fabric and memory clock speeds, "Genoa" is designed for improved performance, lower TCO, and faster time to results with next gen technologies.

The following lists the features and functions included in the AMD Genoa offering:

- Supports AMD Zen4c CPU up to 128 cores and AMD Zen4 CPU up to 96 cores with enhance performance with 32 MB L3 cache/core. Integrated I/O support for up to 128 lanes with PCI Express 5.
- Enhanced Memory Performance with support up to 4800 MT/s DIMMs (1 DPC), and RDIMM support. Enhanced Memory Performance with: Infinity Fabric™ and Memory Clock Synchronized. Largest Available x86 L3 Cache – up to 32 MB/core.
- Memory Capacity with up to 12 channels DDR5 and up to 256 GB/channel support with 2, 4, 6, 8, 10 and 12 channel performance optimization options.
- Enhanced physical and virtual security with AMD Infinity Guard that includes silicon embedded security and virtual features (Secure Memory Encryption and Secure Encrypted Virtualization-Secure Nested Paging (SEV-SNP).

5

Memory subsystem

Topics:

- Supported memory

Supported memory

The R6615 support up to 12 DIMMs, with up to 3 TB of memory and speeds of up to 4800MT/s.

The R6615 support registered (RDIMMs), allowing for the maximum platform memory capacity. Unbuffered DIMMs (UDIMMs) are not supported.

Table 3. Memory technology comparison

Feature	PowerEdge R6615 (DDR5)
DIMM type	RDIMM
Transfer speed	4800 MT/s
Voltage	1.1 V

Table 4. Supported memory matrix

DIMM type	Rank	Capacity	DIMM rated voltage and speed	Operating Speed
				1 DIMM per channel (DPC)
RDIMM	1R	16 GB	DDR5 (1.1 V), 4800 MT/s	4800 MT/s
	2R	32 GB	DDR5 (1.1 V), 4800 MT/s	4800 MT/s
	2R	64 GB	DDR5 (1.1 V), 4800 MT/s	4800 MT/s
	4R	128 GB	DDR5 (1.1 V), 4800 MT/s	4800 MT/s
	8R	256 GB	DDR5 (1.1 V), 4800 MT/s	4800 MT/s

6

Storage

Topics:

- Storage controllers
- Supported Drives
- Internal storage configuration
- External Storage

Storage controllers

Dell's RAID controller options offer performance improvements, including the fPERC solution. fPERC provides a base RAID HW controller without consuming a PCIe slot by using a small form factor and high-density connector to the base planar. 16G PERC Controller offerings will be a heavy leverage of 15G PERC family. The Value and Value Performance levels will carry over to 16G from 15G. New to 16G, is the Harpoon-based Premium Performance tier offering. This high-end offering will drive IOPs performance and enhanced SSD performance.

Table 5. PERC Series controller offerings

Performance Level	Controller and Description
Entry	S160
Value	H355 HBA355 (Internal/External)
Premium Performance	H755, H755N, H965 (Internal)

NOTE: For more information on the features of the Dell PowerEdge RAID controllers (PERC), Software RAID controllers, or BOSS card, and on deploying the cards, see the storage controller documentation at www.dell.com/storagecontrollermanuals.

Supported Drives

The table shown below lists the internal drives supported by the R6615.

Table 6. Supported Drives

Form Factor	Type	Speed	Rotational Speed	Capacities
2.5 inches	vSAS	12 Gb	SSD	1.92 TB, 3.84 TB, 960 GB, 7.62 TB
2.5 inches	SAS	24 Gb	SSD	1.92 TB, 1.6 TB, 800 GB, 3.84 TB, 960 GB, 7.68 TB
2.5 inches	SATA	6 Gb	SSD	1.92 TB, 480 GB, 960 GB, 3.84 TB
2.5 inches	NVMe	Gen4	SSD	1.6 TB, 3.2 TB, 6.4 TB, 1.92 TB, 3.84 TB, 15.63 TB, 7.68 TB, 800 GB, 400 GB
2.5 inches	DC NVMe	Gen4	SSD	3.84 TB, 960 GB
2.5 inches	SAS	12 Gb	10 K	600 GB, 1.2 TB, 2.4 TB
3.5 inches	SATA	6 Gb	7.2 K	2 TB, 4 TB, 8 TB, 12 TB, 16 TB, 20 TB
3.5 inches	SAS	12 Gb	7.2 K	2 TB, 4 TB, 8 TB, 12 TB, 16 TB, 20 TB

Internal storage configuration

Table 7. R6615 Internal Storage Configuration Matrix

Total HDD/ SSD (not BOSS)	NVMe Enabled / Universal Slots	16G Storage Front	Rear Storage	PERC Qty (f+a)	Storage Controller(s)	Controller Form Factor
0*	0 / 0	N/A	N/A	0+0	N/A	N/A
8	0 / 0	1U 4x3.5-inch Passive	N/A	1+0	HBA355i / H355	Front PERC
12	0 / 0	1U 4x3.5-inch Passive	1U Rear X2 E3.S BP	1+0	HBA355i / H355 / S160_NVMe	Front PERC
14	0 / 0	1U 8x2.5 SAS4/ SATA RAID	N/A	1+0	HBA355i / H355	Front PERC
14	8 / 0	1U 8x2.5 Universal (SAS4/Gen4)	N/A	0+0	S160_NVMe	N/A
16	8 / 0	1U 8x2.5 Universal (SAS4/Gen4)	N/A	1+0	H755N	Front PERC
16	8 / 0	1U 8x2.5 Universal (SAS4/Gen4)	N/A	1+0	H965i	Front PERC
16	8 / 8	1U 8x2.5 Universal (SAS4/Gen4)	N/A	1+0	HBA355i / H355 / H755 / S160_NVMe	Front PERC
8	8 / 8	1U 8x2.5 Universal (SAS4/Gen4)	N/A	1+0	H965i / S160_NVMe	Front PERC
8	0 / 0	1U 10x2.5-inch Uni BP (SAS4/ Gen4)	N/A	1+0	HBA355i / H355 / H755	Front PERC
8	0 / 0	1U 10x2.5-inch Uni BP (SAS4/ Gen4)	N/A	1+0	H965i	Front PERC
16	4 / 4	1U 10x2.5-inch Uni BP (SAS4/ Gen4)	N/A	1+0	HBA355i / H355 / H755 / S160_NVMe	Front PERC
16	4 / 4	1U 10x2.5-inch Uni BP (SAS4/ Gen4)	N/A	1+0	H965i	Front PERC
16	0 / 0	1U 10x2.5-inch Uni BP (SAS4/ Gen4)	1U Rear 2x2.5 Universal Passive (SAS4)	1+0	HBA355i / H355 / H755	Front PERC
16	0 / 0	1U 10x2.5-inch Uni BP (SAS4/ Gen4)	1U Rear 2x2.5 Universal Passive (SAS4)	1+0	H965i	Front PERC
16	10 / 0	1U 10x2.5-inch Uni BP (SAS4/ Gen4)	N/A	0+0	S160_NVMe	N/A

Table 7. R6615 Internal Storage Configuration Matrix (continued)

Total HDD/ SSD (not BOSS)	NVMe Enabled / Universal Slots	16G Storage Front	Rear Storage	PERC Qty (f+a)	Storage Controller(s)	Controller Form Factor
24	0 / 0	1U 10x2.5-inch Uni BP (SAS4/ Gen4)	1U Rear x2 E3.S BP	1+0	HBA355i / H355 / H755 / S160_NVMe	Front PERC
24	0 / 0	1U 10x2.5-inch Uni BP (SAS4/ Gen4)	1U Rear x2 E3.S BP	1+0	H965i / S160_NVMe	Front PERC
24	10 / 0	1U 10x2.5-inch Uni BP (SAS4/ Gen4)	1U Rear x2 E3.S BP	0+0	S160_NVMe	N/A
24	8 / 0	1U 8xE3.S Passive BP	N/A	0+0	S160_NVMe	N/A
24	8 / 0	1U 8xE3.S w/ fPERC power slot Passive BP	N/A	2+0	H755N	Front PERC
24	8 / 0	1U 8xE3.S w/ fPERC power slot Passive BP	N/A	2+0	H965i	Front PERC
26	8 / 0	1U 8xE3.S Passive BP	N/A	0+0	S160_NVMe	N/A

NOTE: *BOSS Mandatory: All other configurations support optional BOSS.

External Storage

The R6615 support the external storage device types listed in the table below.

Table 8. Support for External Storage Devices

Device Type	Description
External Tape	Supports connection to external USB tape products
NAS/IDM appliance software	Supports NAS software stack
JBOD	Supports connection to 12Gb MD-series JBODs

7

Networking

Topics:

- Overview
- OCP 3.0 support

Overview

PowerEdge offers a wide variety of options to get information moving to and from our servers. Industry best technologies are chosen, and systems management features are added by our partners to firmware to tie in with iDRAC. These adapters are rigorously validated for worry-free, fully supported use in Dell servers.

OCP 3.0 support

Table 9. OCP 3.0 feature list

Feature	OCP 3.0
Form factor	SFF
PCIe Gen	Gen4
Max PCIe width	x8
Max no.of ports	4
Port type	BT/SFP+/SFP28
Max port speed	25 GbE
NC-SI	Yes
SNAPI	Yes
WoL	Yes
Power consumption	35W

Supported OCP cards

Table 10. R6615 OCP 3.0 support list

Form Factor	Vendor	Port type	Max Port speed	Port Count
OCP 3.0	Intel	BT	10GbE	4
	Intel	SFP28	25GbE	2
	Mellanox	SFP28	25GbE	2
	Broadcom	BT	1GbE	4
	Broadcom	BT	1GbE	4
	Broadcom	SFP28	25GbE	4

Table 10. R6615 OCP 3.0 support list (continued)

Form Factor	Vendor	Port type	Max Port speed	Port Count
	Broadcom	SFP28	25GbE	2
	Broadcom	V3	25GbE	2
	Broadcom	BT	10GbE	2
	Broadcom	V2	10GbE	2
	Intel	BT	10GbE	2
	Broadcom	BT	10GbE	4
	Broadcom	V3	25GbE	4
	Intel	SFP28	25GbE	4
	Intel	BT	1GbE	4

OCP NIC 3.0 vs. rack Network Daughter Card comparisons

Table 11. OCP 3.0, 2.0, and rNDC NIC comparison

Form Factor	Dell rNDC	OCP 2.0 (LOM Mezz)	OCP 3.0	Notes
PCIe Gen	Gen 3	Gen 3	Gen 4	Supported OCP3 are SFF (small form factor)
Max PCIe Lanes	x8	Up to x16	Up to x8	See server slot priority matrix
Shared LOM	Yes	Yes	Yes	This is iDRAC port redirect
Aux Power	Yes	Yes	Yes	Used for Shared LOM

8

PCIe subsystem

Topics:

- PCIe risers

PCIe risers

Shown below are the riser offerings for the platform.

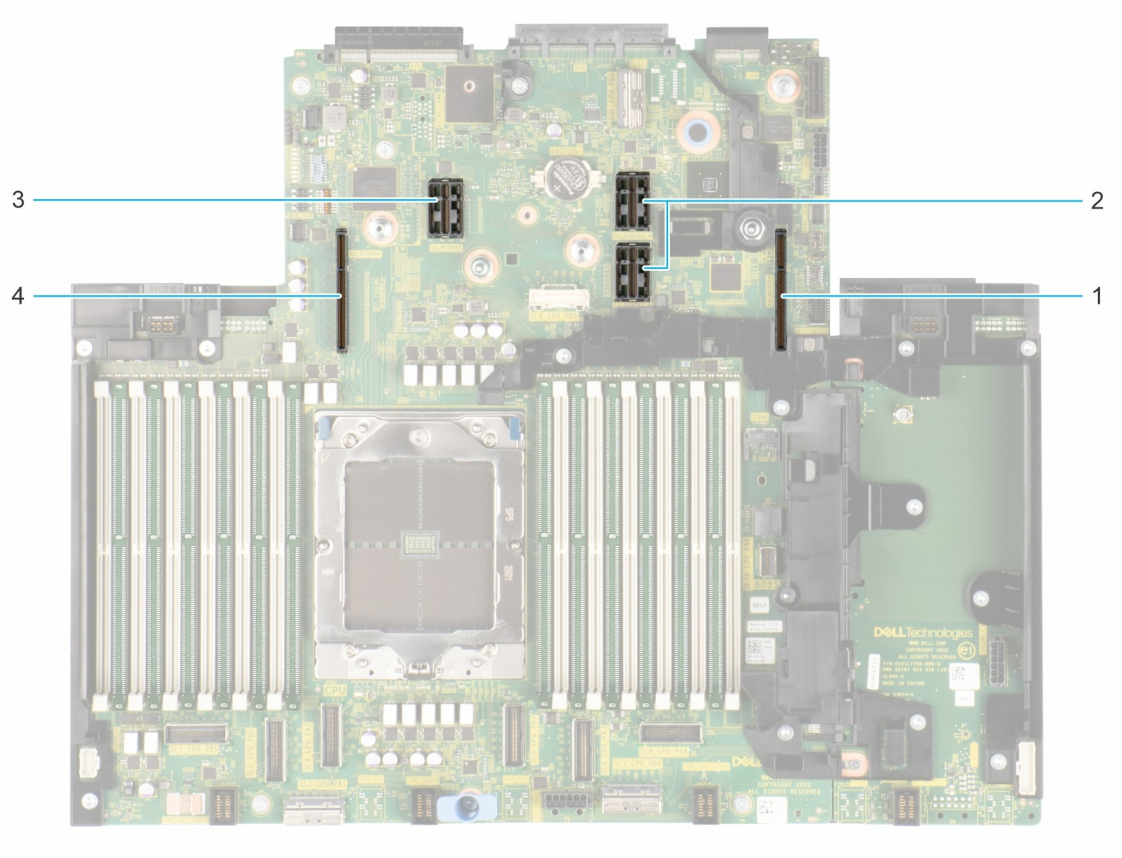

Figure 16. Riser connector location on system board

1. Riser 1
2. Riser 2
3. Riser 3
4. Riser 4

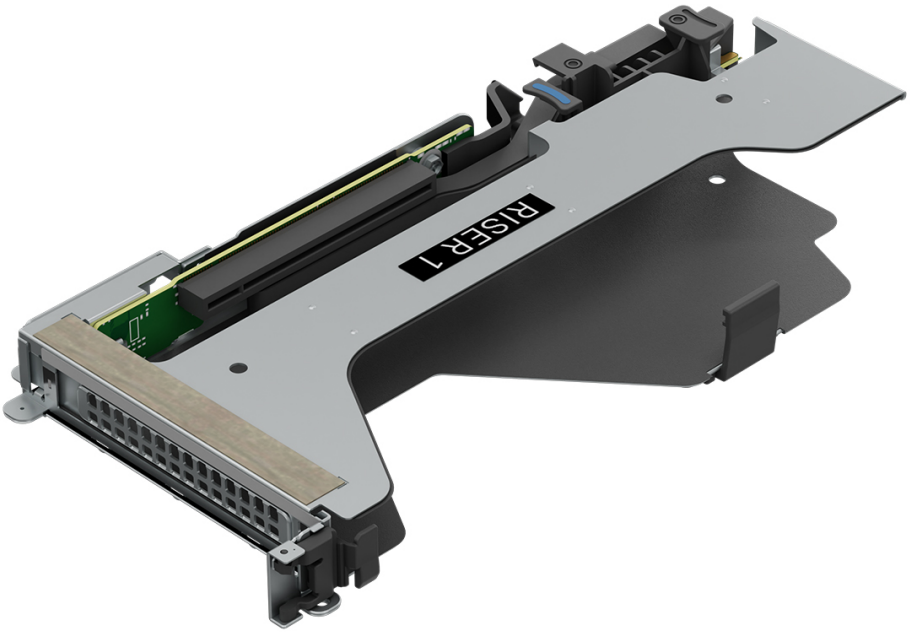

Figure 17. Riser R1Q

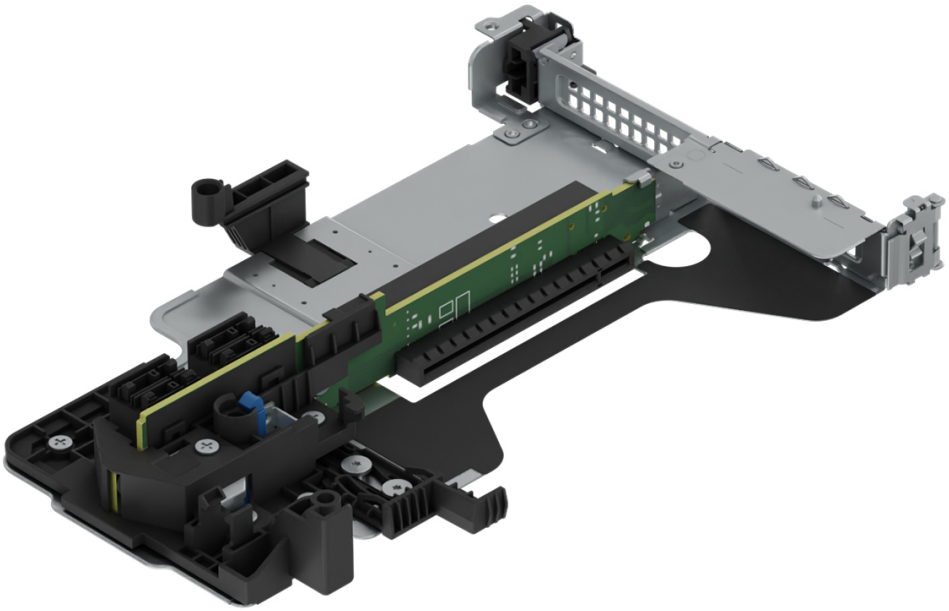

Figure 18. Riser R2A

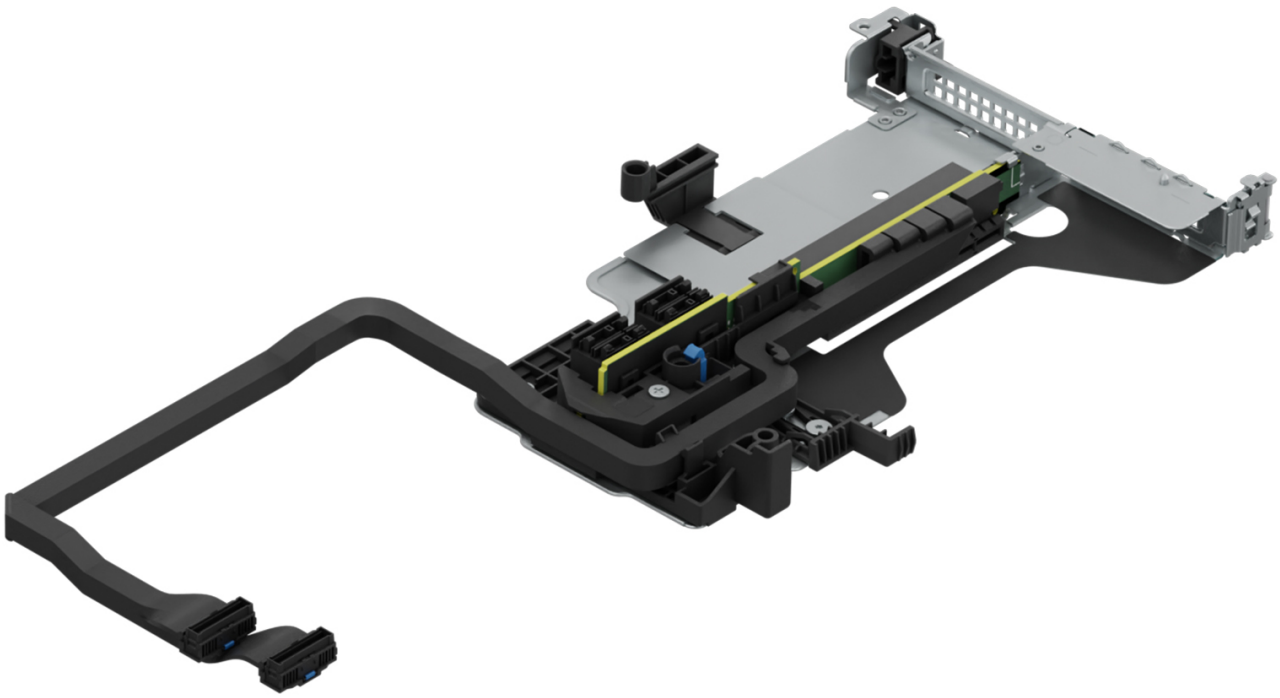

Figure 19. Riser R2T

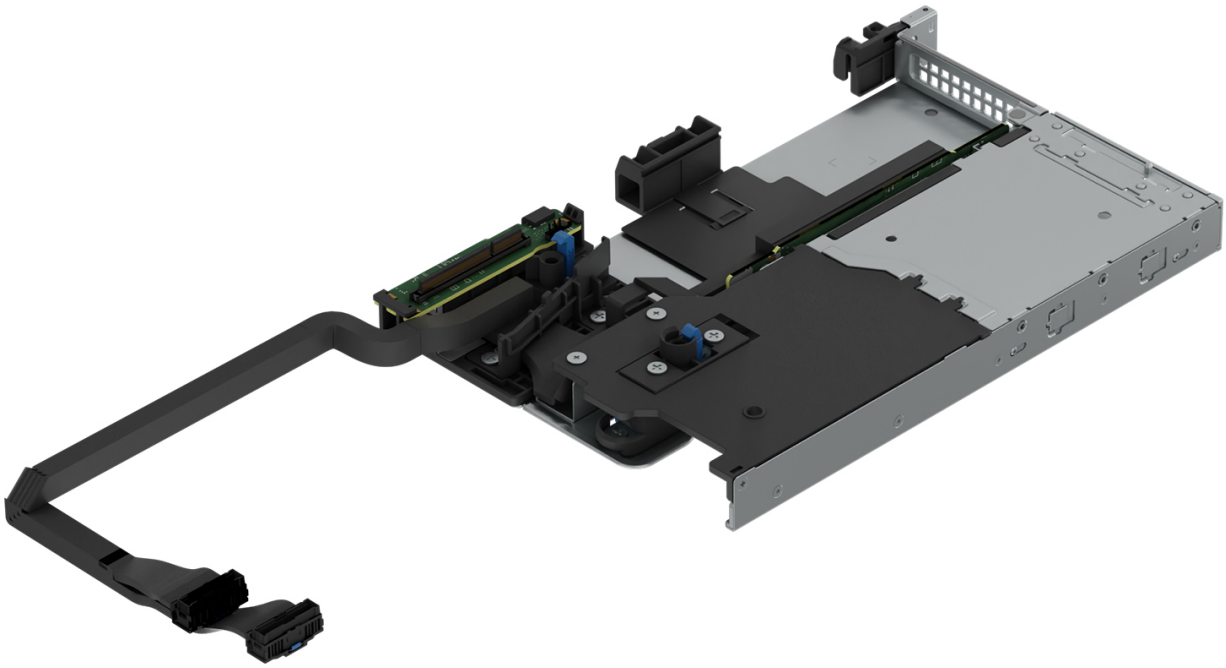

Figure 20. Riser R2U

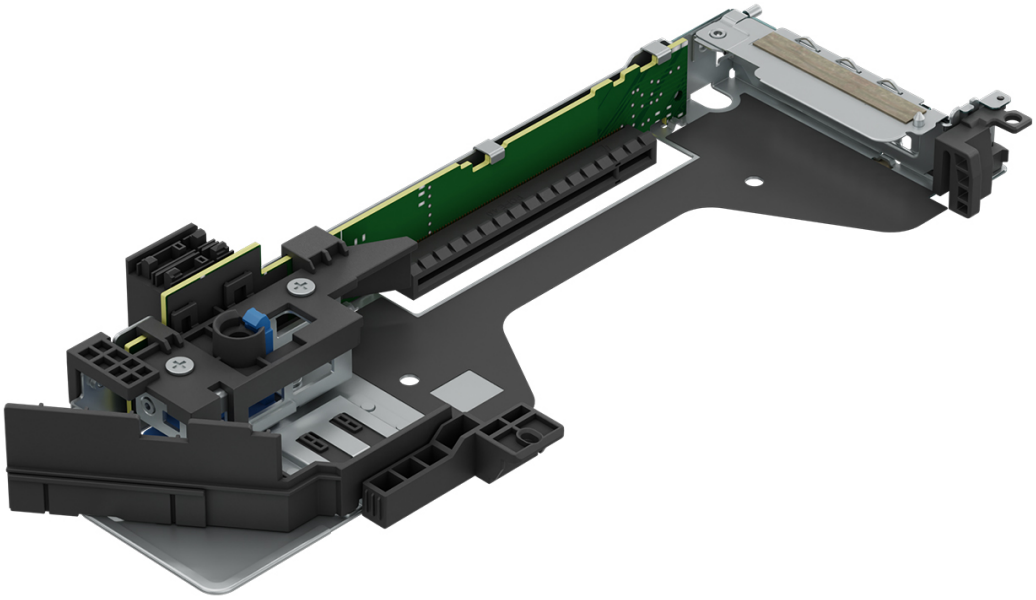

Figure 21. Riser R3A

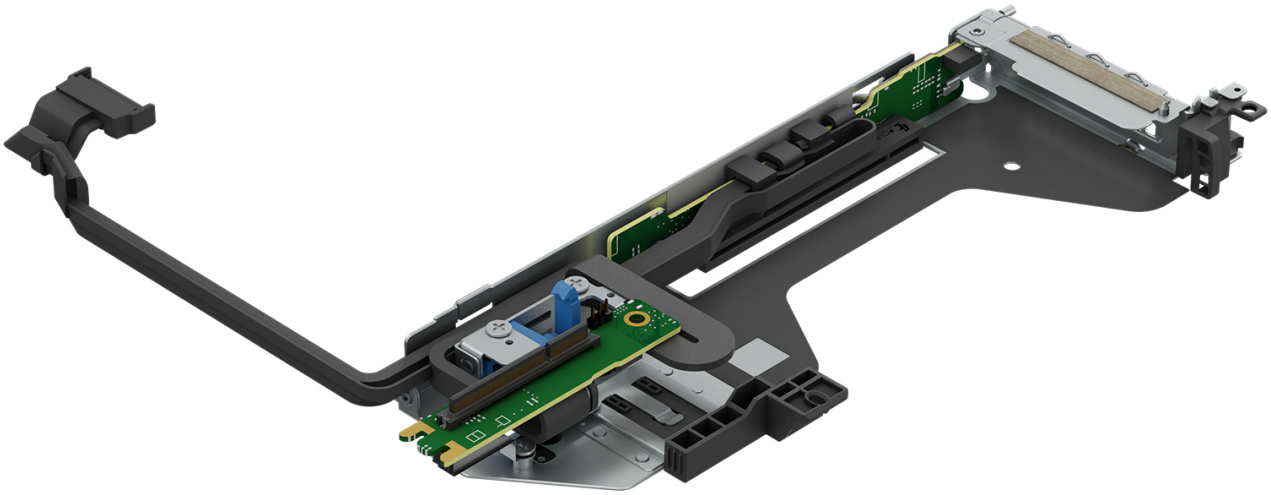

Figure 22. Riser R3P

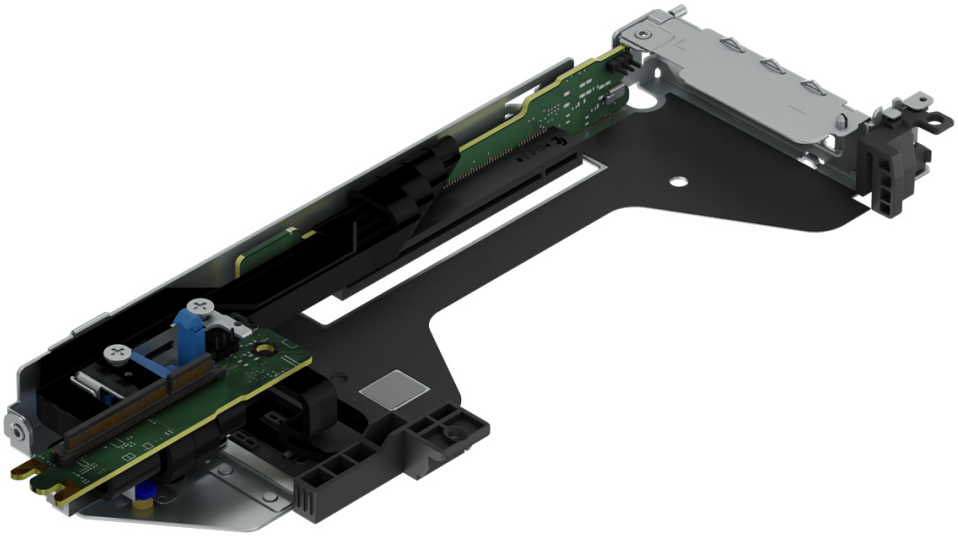

Figure 23. Riser R3S

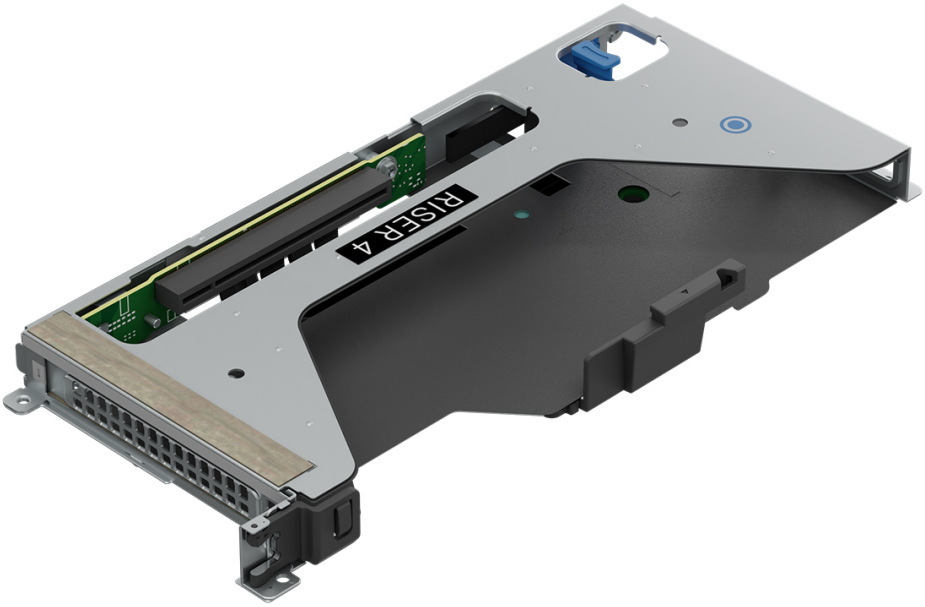

Figure 24. Riser R4P

Table 12. PCIe Riser Configs

Config No.	RSR Configuration	# of CPUs	PERC type supported	Rear Storage Possible
0	NO RSR	1	Front PERC	No
1	R2A + R3A	1	Front PERC	Yes

Table 12. PCIe Riser Configs (continued)

Config No.	RSR Configuration	# of CPUs	PERC type supported	Rear Storage Possible
2	R2T + R3P	1	Front PERC	Yes
3	R1Q + R4p	1	Front PERC	No
4	R2T	1	Front PERC	Yes
5	R3P	1	Front PERC	Yes
6	R2A	1	Front PERC	No
7	R2U + R3S	1	Front PERC	Yes
8	R2T + R3A	1	Front PERC	Yes

9

Power, thermal, and acoustics

PowerEdge servers have an extensive collection of sensors that automatically track thermal activity, which helps regulate temperature thereby reducing server noise and power consumption. The table below lists the tools and technologies Dell offers to lower power consumption and increase energy efficiency.

Topics:

- Power
- Thermal
- Acoustics

Power

Table 13. Power tools and technologies

Feature	Description
Power Supply Units(PSU) portfolio	Dell's PSU portfolio includes intelligent features such as dynamically optimizing efficiency while maintaining availability and redundancy. Find additional information in the Power supply units section.
Tools for right sizing	Enterprise Infrastructure Planning Tool (EIPT) is a tool that can help you determine the most efficient configuration possible. With Dell's EIPT, you can calculate the power consumption of your hardware, power infrastructure, and storage at a given workload. Learn more at www.dell.com/calc.
Industry Compliance	Dell's servers are compliant with all relevant industry certifications and guide lines, including 80 PLUS, Climate Savers and ENERGY STAR.
Power monitoring accuracy	PSU power monitoring improvements include: ● Dell's power monitoring accuracy is currently 1%, whereas the industry standard is 5% ● More accurate reporting of power ● Better performance under a power cap
Power capping	Use Dell's systems management to set the power cap limit for your systems to limit the output of a PSU and reduce system power consumption. Dell is the first hardware vendor to leverage Intel Node Manager for circuit-breaker fast capping.
Systems Management	iDRAC Enterprise and Datacenter provides server-level management that monitors, reports and controls power consumption at the processor, memory and system level. Dell OpenManage Power Center delivers group power management at the rack, row, and data center level for servers, power distribution units, and uninterruptible power supplies.
Active power management	Intel Node Manager is an embedded technology that provides individual server-level power reporting and power limiting functionality. Dell offers a complete power management solution comprised of Intel Node Manager accessed through Dell iDRAC9 Datacenter and OpenManage Power Center that allows policy-based management of power and thermal at the individual server, rack, and data center level. Hot spare reduces power consumption of redundant power supplies. Thermal control off a speed optimizes the thermal settings for your environment to reduce fan consumption and lower system power consumption. Idle power enables Dell servers to run as efficiently when idle as when at full workload.
Fresh Air cooling	Refer to ASHRAE A3/A4 Thermal Restriction.

Table 13. Power tools and technologies (continued)

Feature	Description
Rack infrastructure	Dell offers some of the industry's highest-efficiency power infrastructure solutions, including: ● Power distribution units (PDUs) ● Uninterruptible power supplies (UPSs) ● Energy Smart containment rack enclosures Find additional information at: https://www.delltechnologies.com/en-us/servers/power-and-cooling.htm.

Power Supply Units

Energy Smart power supplies have intelligent features, such as the ability to dynamically optimize efficiency while maintaining availability and redundancy. Also featured are enhanced power-consumption reduction technologies, such as high-efficiency power conversion and advanced thermal-management techniques, and embedded power-management features, including high-accuracy power monitoring. The table below shows the power supply unit options that are available for the R6615.

Table 14. Power Supply Unit Options

Wattage	Frequency	Voltage/Current	Class	Heat dissipation
700 W mixed mode	50/60Hz	200-240 V AC/4.1 A	Titanium	2625 BTU/hr
	N/A	240 V DC/3.4 A	N/A	2625 BTU/hr
800 W mixed mode	50/60Hz	100–240 V AC/ 9.2-4.7 A	Platinum	3000 BTU/hr
	N/A	240 V DC/3.8 A	N/A	3000 BTU/hr
1100 W mixed mode	50/60 Hz	100–240 V AC/ 12-3.6 A	Titanium	4100 BTU/hr
	N/A	240 V DC/5.2 A	N/A	4100 BTU/hr
1100 W -48 VDC	N/A	-48 - -60 V DC/27A	N/A	4625 BTU/hr
1400 W mixed mode	50/60 Hz	100–240 V AC/ 12-8 A	Platinum	5250 BTU/hr
	N/A	240 V DC/6.6 A	N/A	5250 BTU/hr
1800 W mixed mode	50/60 Hz	200-240 V AC/10 A	Titanium	6610 BTU/hr
	N/A	240 V DC/8.2 A	N/A	6610 BTU/hr

NOTE: If a system with AC 1400 W or 1100 W PSUs operates at low line 100-120 Vac, and then the power rating per PSU is degraded to 1050 W.

Table 15. PSU power cords

Form factor	Output	Power cord
Redundant 60 mm	700 W AC	C13
	800 W AC	C13
	1100 W AC	C13
	1100 W -48 V DC	C13
	1400 W AC	C13
	1800 W AC	C15

NOTE: C13 power cord combined with C14 to C15 jumper power cord can be used to adapt 1800 W PSU.

Thermal

PowerEdge servers have an extensive collection of sensors that automatically track thermal activity, which helps regulate temperature thereby reducing server noise and power consumption.

Thermal design

Thermal management of the platform helps deliver high performance with the right amount of cooling to components, while maintaining the lowest fan speeds possible. This is done across a wide range of ambient temperatures from 10°C to 35°C (50°F to 95°F) and to extended ambient temperature ranges.

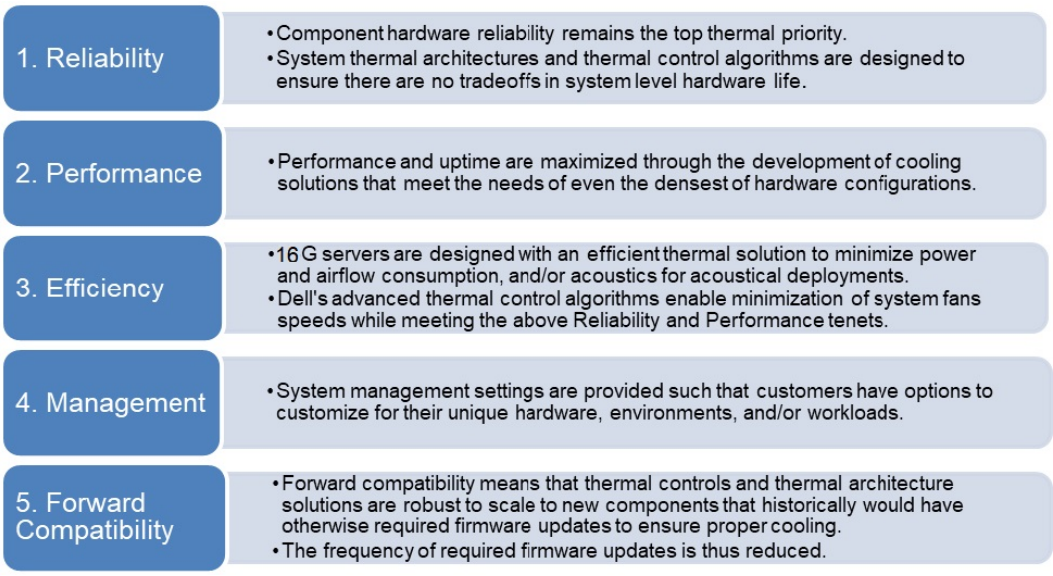

Figure 25. Thermal design characteristics

The thermal design of the PowerEdge R6615 reflects the following:

- Optimized thermal design: The system layout is architected for optimum thermal design.
- System component placement and layout are designed to provide maximum airflow coverage to critical components with minimum expense of fan power.
- Comprehensive thermal management: The thermal control system regulates the fan speed based on several different responses from all system-component temperature sensors, as well as inventory for system configurations. Temperature monitoring includes components such as processors, DIMMs, chipset, the inlet air ambient, hard disk drives, and OCP.
- Open and closed loop thermal fan speed control: Open loop thermal control uses system configuration to determine fan speed based on inlet air ambient temperature. Closed loop thermal control method uses feedback temperatures to dynamically determine proper fan speeds.
- User-configurable settings: With the understanding and realization that every customer has unique set of circumstances or expectations from the system, in this generation of servers, we have introduced limited user- configurable settings residing in the iDRAC BIOS setup screen. For more information, see the Dell PowerEdge R6615 Installation and Service Manual at www.dell.com/poweredgemanuals and "Advanced Thermal Control: Optimizing across Environments and Power Goals" on Dell.com.
- Cooling redundancy: The R6615 allows N+1 fan redundancy, allowing continuous operation with one fan failure in the system.
- Environmental Specifications: The optimized thermal management makes the R6615 reliable under a wide range of operating environments.

Acoustics

Acoustical performance

Dell PowerEdge R6615 is a rack-mount server appropriate for attended data center environment. However, lower acoustical output is attainable with proper hardware or software configurations.

Table 16. Acoustical Configurations of R6615

Configuration	Quietest Low End	Entry	Volume - 1 (HPC)	Feature Rich
CPU Type	AMD Genoa	AMD Genoa	AMD Genoa	AMD Genoa
CPU TDP	200 W / 24°C	200 W / 24°C	200 W / 24°C	320 W / 48°C
CPU Quantity	1	1	1	1
Memory Type	16GB DDR5	16GB DDR5	64GB DDR5	128GB DDR5
DIMM Quantity	6	6	12	24
Backplane Type	4 x 3.5 inches	4 x 3.5 inches	10 x 2.5 inches	10 x 2.5 inches
HDD Type	3.5 inches SATA 2TB	3.5 inches SATA 2TB	2.5 inches NVMe SSD	Intel P4500 2TB NVMe SSD
HDD Quantity	2	2	10	Feature Rich
PSU Type	800 W	800 W	1400 W	1400 W
PSU Quantity	2	2	2	2
PCI 1	N/A	N/A	Dual Port 25 GbE	N/A
PCI 2	N/A	N/A	Dual Port 25 GbE	N/A
Front PERC	PERC H355	PERC H355	PERC H355	No PERC
OCP	Dual Port 10 GbE	Dual Port 10 GbE	Dual Port 25GbE	Dual Port 200GbE
M.2	No	No	BOSS-N1	BOSS-N1

Table 17. Acoustical experience of R6615 configurations

Configuration		Quietest Low End	Entry	Volume - 1 (HPC)	Feature Rich
Acoustical Performance: Idle/ Operating @ 25°C Ambient					
$L_{wA,m}$ (B)	Idle[4]	5.2	5.2	5.5	6.0
	Operating/Customer usage operating[5][6]	5.2	5.2	5.5	6.0
K_v (B)	Idle [4]	0.4	0.4	0.4	0.4
	Operating/Customer usage operating[5][6]	0.4	0.4	0.4	0.4
$L_{pA,m}$ (dB)	Idle[4]	35	35	39	43
	Operating/Customer usage operating[5][6]	35	35	39	43
Prominent tones[3]		No prominent tones in Idle and Operating			
Acoustical Performance: Idle @ 28°C Ambient					

Table 17. Acoustical experience of R6615 configurations (continued)

Configuration	Quietest Low End	Entry	Volume - 1 (HPC)	Feature Rich
$L_{wA,m}$[1] (B)	5.4	5.4	5.9	6.2
K_v (B)	0.4	0.4	0.4	0.4
$L_{pA,m}$[2] (dB)	38	38	43	46
Acoustical Performance: Max. loading @ 35°C Ambient				
$L_{wA,m}$[1] (B)	7,8	7,8	8,0	8,6
K_v (B)	0,4	0.4	0.4	0.4
$L_{pA,m}$[2](dB)	63	63	64	70

[1]LwA,m: The declared mean A-weighted sound power level (LwA) is calculated per section 5.2 of ISO 9296 (2017) with data collected using the methods that are described in ISO 7779 (2010). Engineering data presented here may not be fully compliant with ISO 7779 declaration requirement.

[2]LpA,m: The declared mean A-weighted emission sound pressure level is at the bystander position per section 5.3 of ISO 9296 (2017) and measured using methods that are described in ISO 7779 (2010). The system is placed in a 24U rack enclosure, 75 cm above a reflective floor. Engineering data presented here may not be fully compliant with ISO 7779 declaration requirement.

[3]Prominent tones: Criteria of Annex D of ECMA-74 and Prominence Ratio method of ECMA-418 are followed to determine if discrete tones are prominent and to report them, if so.

[4]Idle mode: The steady-state condition in which the server is energized but not operating any intended function.

[5]Operating mode: The maximum of the steady state acoustical output at 50% of CPU TDP or active storage drives for the respective sections of Annex C of ECMA-74.

[6] Customer Usage Operating mode: The operating mode is represented by the maximum of the steady state acoustical output at 25%~30% of CPU TDP, 2.5%~10% IOPs load, and >80% GPU load as the components showed in the above configurations.

PowerEdge acoustical specifications

Dell typically categorizes servers in five categories of acoustically acceptable usage:

- Category 1: Table-top in Office Environment
- Category 2: Floor-standing in Office Environment
- Category 3: General Use Space
- Category 4: Attended Data Center
- Category 5: Unattended Data Center

Category 1: Table-top in Office Environment

When Dell determines that a specific Enterprise product is to be used primarily on top of the table, then the acoustical specification in the table below applies. Noise from the product should not annoy or otherwise interfere with the user's thoughts or speech, for example, on the telephone.

Table 18. Dell Enterprise Category 1, "Table-top in Office Environment" acoustical specification category

Measurement Position re AC0158	Metric, re AC0159	Test Modes, re AC0159 (note must be in steady state, see AC0159, except where noted below)			Simulate (that is, set fan speeds representative) for Idle at 28° C & 35° C Ambient, and for 100% loading and maximum configuration, at 35° C Ambient
		Standby in 23±2° C Ambient	Idle in 23±2° C Ambient	Operating in 23±2° C Ambient – if not otherwise specified in the program's configuration document, then processor and hard drive operating modes are required	
Sound Power	LWA,m, B	≤ 4.2	≤ 4.7	≤ 5.0	Report
Sound Quality (both positions must meet limits): Front Binaural HEAD and Rear Microphone	Tones, Hz, dB	No prominent tones per criteria D.10.6 and D.10.8 of ECMA-74			Report tones
	Tonality, tu	≤ 0.35	≤ 0.35	≤ 0.35	Report
	Dell Modulation, %	≤ 35	≤ 35	≤ 35	Report
	Loudness, sones	Report	Report	Report	Report
	LpA-single point, dBA	Report	Report	Report	Report
Front Binaural HEAD	Transients	• Oscillation (see AC0159), if observed, during 20-minute steady-state observation, must adhere to the following two criteria: ○ Max. {ΔLpA} < 3.0 dB ○ Event count < 3 for "1.5 dB < ΔLpA < 3.0 dB" ○ Acoustical Jump (see AC0159), during air mover speed transition from Idle to Operating Mode must be ≤ 15dB. • Startup behavior ○ Report Startup behavior re. AC0159 ○ Startup must proceed smoothly, i.e., no sudden or large jumps, and fan speed during startup must not exceed 50% of its maximum • Transient inputs: Report time-history sound pressure levels re AC0159 "Train of Step Functions on Processor"			N/A
Any	Other	• No rattles, squeaks, or unexpected noises. • Sound should be "even" around the EUT (one side should not be dramatically louder than another). • Unless otherwise specified, the "default" thermal-related settings shall be selected for BIOS and iDRAC. • Specific operating conditions are defined in "Configurations and Configuration Dependencies" for each platform.			
Sound Pressure	LpA-reported, dBA, re AC0158 and program configuration document	Report for all mics	Report for all mics	Report for all mics	Report for all mics

Category 2: Floor-standing in Office Environment

When Dell determines that a specific Enterprise product is to be used primarily when it is sitting on the floor, that is, next to a user's feet, then the acoustical specification in the table below applies. Noise from the product should not annoy or otherwise interfere with the user's thoughts or speech, for example, on the telephone.

Table 19. Dell Enterprise Category 2, "Floor-standing in Office Environment" acoustical specification category

Measurement Position re AC0158	Metric, re AC0159	Test Modes, re AC0159 (note must be in steady state, see AC0159, except where noted below)			
		Standby in 23±2° C Ambient	Idle in 23±2° C Ambient	Operating in 23±2° C Ambient – if not otherwise specified in the program's configuration document, then processor and hard drive operating modes are required	Simulate (that is, set fan speeds representative) for Idle at 28° C & 35° C Ambient, and for 100% loading and maximum configuration, at 35° C Ambient
Sound Power	LWA,m, B	≤ 4.9	≤ 5.1	≤ 5.4	Report
Sound Quality (both positions must meet limits): Front Binaural HEAD and Rear Microphone	Tones, Hz, dB	No prominent tones per criteria D.10.6 and D.10.8 of ECMA-74			Report tones
	Tonality, tu	≤ 0.35	≤ 0.35	≤ 0.35	Report
	Dell Modulation, %	≤ 35	≤ 35	≤ 35	Report
	Loudness, sones	Report	Report	Report	Report
	LpA-single point, dBA	Report	Report	Report	Report
Front Binaural HEAD	Transients	• Oscillation (see AC0159), if observed, during 20-minute steady-state observation, must adhere to the following two criteria: ○ Max. {ΔLpA} < 3.0 dB ○ Event count < 3 for "1.5 dB < ΔLpA < 3.0 dB" • Acoustical Jump (see AC0159), during air mover speed transition from Idle to Operating Mode must be ≤ 15 dB. • Startup behavior ○ Report Startup behavior re. AC0159 ○ Startup must proceed smoothly, that is, no sudden or large jumps, and fan speed during startup must not exceed 50% of its maximum • Transient inputs: Report time-history sound pressure levels re AC0159 "Train of Step Functions on Processor"			N/A
Any	Other	• No rattles, squeaks, or unexpected noises. • Sound should be "even" around the EUT (one side should not be dramatically louder than another). • Unless otherwise specified, the "default" thermal-related settings shall be selected for BIOS and iDRAC. • Specific operating conditions are defined in "Configurations and Configuration Dependencies" for each platform.			
Sound Pressure	LpA-reported, dBA, re AC0158	Report for all mics	Report for all mics	Report for all mics	Report for all mics

Table 19. Dell Enterprise Category 2, "Floor-standing in Office Environment" acoustical specification category (continued)

Measurement Position re AC0158	Metric, re AC0159	Test Modes, re AC0159 (note must be in steady state, see AC0159, except where noted below)			
		Standby in 23±2° C Ambient	Idle in 23±2° C Ambient	Operating in 23±2° C Ambient – if not otherwise specified in the program's configuration document, then processor and hard drive operating modes are required	Simulate (that is, set fan speeds representative) for Idle at 28° C & 35° C Ambient, and for 100% loading and maximum configuration, at 35° C Ambient
	and program configuration document				

Category 3: General Use Space

When Dell determines that a specific Enterprise product is to be predominantly used in a general use space, then the acoustical specification in the table below applies. These products could be found in laboratories, schools, restaurants, open office space layouts, small ventilated closets, etc., though not in close proximity to any particular person nor in quantities greater than a few in any location. People within proximity of a few of these products should not experience any impact to speech intelligibility or annoyance from the noise of the product. A rack product sitting on a table in a common area is an example.

Table 20. Dell Enterprise Category 3, "General Use Space" acoustical specification category

Measurement Position re AC0158	Metric, re AC0159	Test Modes, re AC0159 (note must be in steady state, see AC0159, except where noted below)			Simulate (i.e., set fan speeds representative) for Idle at 28 & 35° C Ambient, and for 100% loading and maximum configuration, at 35° C Ambient
		Standby in 23±2° C Ambient	Idle in 23±2° C Ambient	Operating in 23±2° C Ambient – if not otherwise specified in the program's configuration document, then processor and hard drive operating modes are required	
Sound Power	LWA,m, B	≤ 5.2	≤ 5.5	≤ 5.8	Report
Sound Quality (both positions must meet limits): Front Binaural HEAD and Rear Microphone	Tones, Hz, dB	No prominent tones per criteria D.10.6 and D.10.8 of ECMA-74			Report tones
	Tonality, tu	≤ 0.35	≤ 0.35	≤ 0.35	Report
	Dell Modulation, %	≤ 35	≤ 35	≤ 35	Report
	Loudness, sones	Report	Report	Report	Report
	LpA-single point, dBA	Report	Report	Report	Report
Front Binaural HEAD	Transients	• Oscillation (see AC0159), if observed, during 20-minute steady-state observation, must adhere to the following two criteria: ○ Max. {ΔLpA} < 3.0 dB ○ Event count < 3 for "1.5 dB < ΔLpA < 3.0 dB"			N/A

Table 20. Dell Enterprise Category 3, "General Use Space" acoustical specification category (continued)

Measurement Position re AC0158	Metric, re AC0159	Test Modes, re AC0159 (note must be in steady state, see AC0159, except where noted below)			Simulate (i.e., set fan speeds representative) for Idle at 28 & 35° C Ambient, and for 100% loading and maximum configuration, at 35° C Ambient
		Standby in 23±2° C Ambient	Idle in 23±2° C Ambient	Operating in 23±2° C Ambient – if not otherwise specified in the program's configuration document, then processor and hard drive operating modes are required	
		○ Acoustical Jump (see AC0159), during air mover speed transition from Idle to Operating Mode must be ≤ 15dB. ● Startup behavior ○ Report Startup behavior re. AC0159 ○ Startup must proceed smoothly, i.e., no sudden or large jumps, and fan speed during startup must not exceed 50% of its maximum ● ∞ Transient inputs: Report time-history sound pressure levels re AC0159 "Train of Step Functions on Processor"			
Any	Other	● No rattles, squeaks, or unexpected noises. ● Sound should be "even" around the EUT (one side should not be dramatically louder than another). ● Unless otherwise specified, the "default" thermal-related settings shall be selected for BIOS and iDRAC. ● Specific operating conditions are defined in "Configurations and Configuration Dependencies" for each platform.			
Sound Pressure	LpA-reported, dBA, re AC0158 and program configuration document	Report for all mics	Report for all mics	Report for all mics	Report for all mics

Category 4: Attended Data Center

When Dell determines that a specific Enterprise product is to be predominantly used in an attended data center, then the acoustical specification of the table applies. The phrase "attended data center" is used to mean a space in which many (from tens to 1000s) of Enterprise products are deployed in proximity (that is, in the same room) to personnel whose speech (perhaps with raised voices) is expected to be intelligible over the data center noise. Hearing protection or hearing monitoring programs are not expected in these areas. Examples in this category include monolithic rack products. When Dell determines that a specific Enterprise product is to be predominantly used in a general use space, then the acoustical specification of the above table applies. These products could be found in laboratories, schools, restaurants, open office space layouts, small ventilated closets, etc., though not in close proximity to any particular person nor in quantities greater than a few in any location. People within proximity of a few of these products should not experience any impact to speech intelligibility or annoyance from the noise of the product. A rack product sitting on a table in a common area is an example.

Table 21. Dell Enterprise Category 4, "Attended Data Center" acoustical specification category

Measurement Position re AC0158	Metric, re AC0159	Test Modes, re AC0159 (note must be in steady state, see AC0159, except where noted below)				Simulate (that is, set fan speeds representative) for 100% loading and maximum configuration, at 35° C Ambient
		Standby in 23±2° C Ambient	Idle in 23±2° C Ambient	Operating in 23±2° C Ambient – if not otherwise specified in the program's configuration document, then processor and hard drive operating modes are required	Simulate (that is, set fan speeds representative) for Idle at 28° C & 35° C Ambient	
Sound Power	LWA,m, B	Report	≤ 6.9	≤ 7.1	Report	≤ 8.5
Front Binaural HEAD	Tones, Hz, dB	Report	< 15 dB	< 15 dB	Report	< 20 dB
	Tonality, tu	Report	Report	Report	Report	Report
	Dell Modulation, %	Report	Report	Report	Report	Report
	Loudness, sones	Report	Report	Report	Report	Report
	LpA-single point, dBA	Report	Report	Report	Report	Report
	Transients	• Oscillation (see AC0159), if observed, during 20-minute steady-state observation, must adhere to the following two criteria: ○ Max. {ΔLpA} < 3.0 dB ○ Event count < 3 for "1.5 dB < ΔLpA < 3.0 dB" ○ Acoustical Jump (see AC0159), during air mover speed transition from Idle to Operating Mode must be ≤ 15 dB. ○ Startup behavior ▪ Report Startup behavior re. AC0159 ▪ Startup must proceed smoothly, that is, no sudden or large jumps, and fan speed during startup must not exceed 50% of its maximum • ∞ Transient inputs: Report time-history sound pressure levels re AC0159 "Train of Step Functions on Processor"			N/A	
Any	Other	• No rattles, squeaks, or unexpected noises. • Sound should be "even" around the EUT (one side should not be dramatically louder than another). • Unless otherwise specified, the "default" thermal-related settings shall be selected for BIOS and iDRAC. • Specific operating conditions are defined in "Configurations and Configuration Dependencies" for each platform.				
Sound Pressure	LpA-reported, dBA	Report for all mics	Report for all mics	Report for all mics	Report for all mics	Report for all mics

Category 5: Unattended Data Center

When Dell determines that a specific Enterprise product is to be predominantly used in an unattended data center (and not blades or blade enclosures; these have their own category), then the acoustical specification in the table below applies. The phrase "unattended data center" is used to mean a space in which many (from tens to 1000s) of Enterprise products are deployed together, its own heating and cooling systems condition the space, and operators or servicers of equipment enter

generally only to deploy, service, or decommission equipment. Hearing protection or hearing monitoring programs may be expected (per government or company guidelines) in these areas. Examples in this category include monolithic rack products.

Table 22. Dell Enterprise Category 5, "Unattended Data Center" acoustical specification category

Measurement Position re AC0158	Metric, re AC0159	Test Modes, re AC0159 (note must be in steady state, see AC0159, except where noted below)				Simulate (that is, set air mover speeds representative) for 100% loading and maximum configuration, at 35° C Ambient
		Standby in 23±2° C Ambient	Idle in 23±2° C Ambient	Operating in 23±2° C Ambient – if not otherwise specified in the program's configuration document, then processor and hard drive operating modes are required	Simulate (that is, set air mover speeds representative) for Idle at 28° C & 35° C Ambient	
Sound Power	LWA,m, B	Report	≤ 7.5	≤ 7.7	Report	≤ 8.7
Front Binaural HEAD	Tones, Hz, dB	Report	< 15 dB	< 15 dB	Report	< 20 dB
	Tonality, tu	Report	Report	Report	Report	Report
	Dell Modulation, %	Report	Report	Report	Report	Report
	Loudness, sones	Report	Report	Report	Report	Report
	LpA-single point, dBA	Report	Report	Report	Report	Report
Front Binaural HEAD	Transients	• Oscillation (see AC0159), if observed, during 20-minute steady-state observation, must adhere to the following two criteria: ○ Max. {ΔLpA} < 3.0 dB ○ Event count < 3 for "1.5 dB < ΔLpA < 3.0 dB" • Report Acoustical Jump (see AC0159) during air mover speed transition from Idle to Operating Mode. • Startup behavior ○ Report Startup behavior re. AC0159 ○ Startup must proceed smoothly, that is, no sudden or large jumps, and air mover speed during startup must not exceed 50% of its maximum • Transient inputs: Report time-history sound pressure levels re AC0159 "Train of Step Functions on Processor"			N/A	
Any	Other	• No rattles, squeaks, or unexpected noises. • Sound should be "even" around the EUT (one side should not be dramatically louder than another). • Unless otherwise specified, the "default" thermal-related settings shall be selected for BIOS and iDRAC. • Specific operating conditions are defined in "Configurations and Configuration Dependencies" for each platform.				

Table 22. Dell Enterprise Category 5, "Unattended Data Center" acoustical specification category (continued)

Measurement Position re AC0158	Metric, re AC0159	Test Modes, re AC0159 (note must be in steady state, see AC0159, except where noted below)				Simulate (that is, set air mover speeds representative) for 100% loading and maximum configuration, at 35° C Ambient
		Standby in 23±2° C Ambient	Idle in 23±2° C Ambient	Operating in 23±2° C Ambient – if not otherwise specified in the program's configuration document, then processor and hard drive operating modes are required	Simulate (that is, set air mover speeds representative) for Idle at 28° C & 35° C Ambient	
Sound Pressure	LpA-reported, dBA, re AC0158 and program configuration document	Report for all mics	Report for all mics	Report for all mics	Report for all mics	Report for all mics

10

Rack, rails, and cable management

Topics:

- Rails and cable management information

Rails and cable management information

The rail offerings for the PowerEdge R6615 consist of two general types: sliding and static. The cable management offerings consist of an optional cable management arm (CMA) and an optional strain relief bar (SRB).

See the *Dell Enterprise Systems Rail Sizing and Rack Compatibility Matrix* available at https://i.dell.com/sites/csdocuments/Business_solutions_engineering-Docs_Documents/en/rail-rack-matrix.pdf for information regarding:

- Specific details about rail types.
- Rail adjustability ranges for various rack mounting flange types
- Rail depth with and without cable management accessories
- Rack types that are supported for various rack mounting flange types

Key factors governing proper rail selection include the following:

- Spacing between the front and rear mounting flanges of the rack
- Type and location of any equipment that is mounted in the back of the rack such as power distribution units (PDUs)
- Overall depth of the rack

Sliding rails features summary

The sliding rails allow the system to be fully extended out of the rack for service. There are two types of sliding rails available, ReadyRails II sliding rails and Stab-in/Drop-in sliding rails. The sliding rails are available with or without the optional cable management arm (CMA) or strain relief bar (SRB).

A15 ReadyRails sliding rails for 4-post racks

- Supports drop-in installation of the chassis to the rails.
- Support for tool-less installation in 19" EIA-310-E compliant square or un-threaded round hole 4-post racks including all generations of the Dell racks.
- Support for tooled installation in 19" EIA-310-E compliant threaded hole 4-post racks.
- Support full extension of the system out of the rack to allow serviceability of key internal components.
- Support for optional strain relief bar (SRB).
- Support for optional cable management arm (CMA).

  NOTE: For situations where CMA support is not required, the outer CMA mounting brackets can be uninstalled from the sliding rails. This reduces the overall length of the rails and eliminates the potential interferences with rear mounted PDUs or the rear rack door.

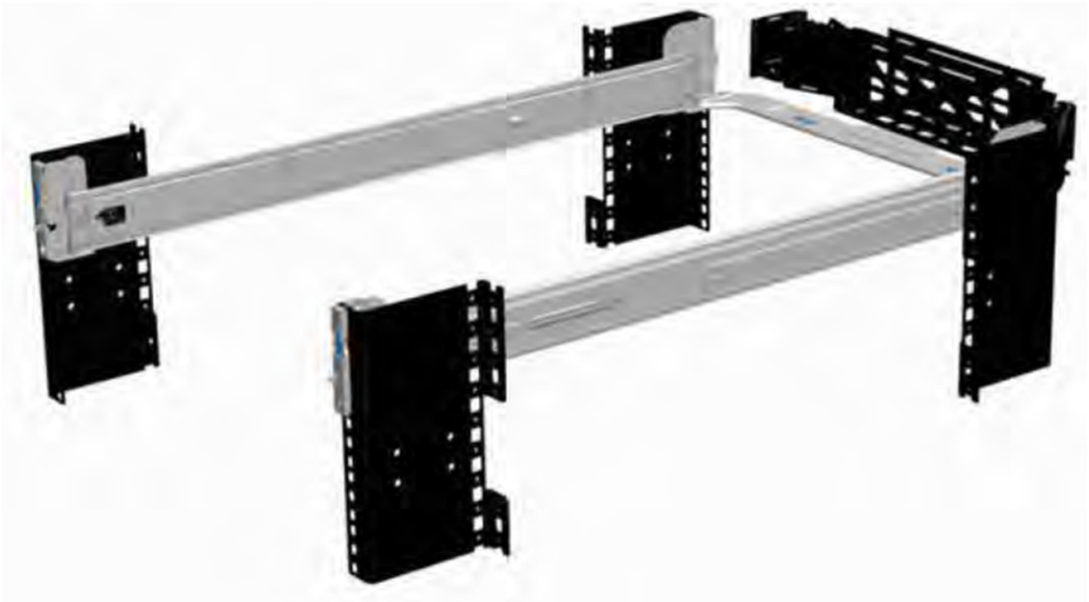

Figure 26. Sliding rails with optional CMA

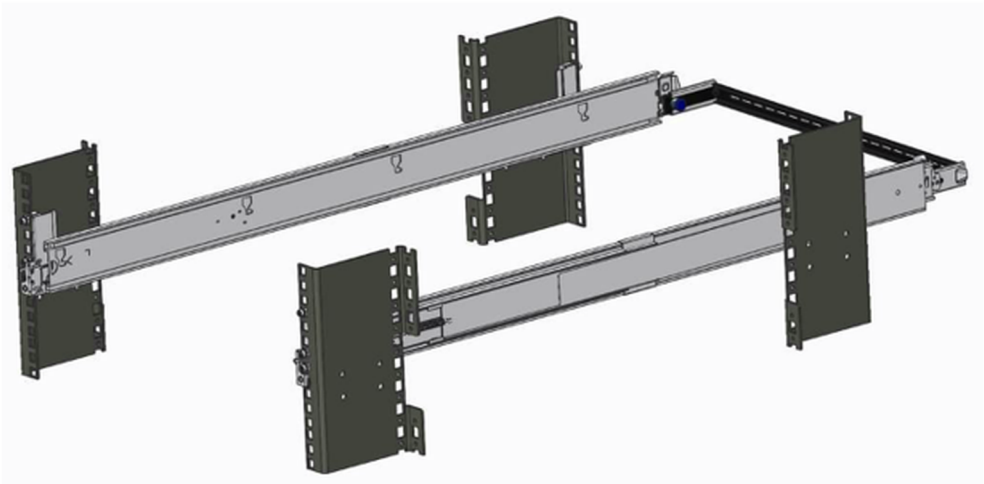

Figure 27. Sliding rails with optional SRB

A16 Stab-in/Drop-in sliding rails for 4-post racks

- Supports drop-in or stab-in installation of the chassis to the rails.
- Support for tool-less installation in 19" EIA-310-E compliant square, un-threaded round hole racks including all generations of the Dell racks. Also supports tool-less installation in threaded round hole 4-post racks.
- Support for tool-less installation in Dell Titan or Titan-D racks
- Support full extension of the system out of the rack to allow serviceability of key internal components.
- Support for optional cable management arm (CMA).
- Support for optional strain relief bar (SRB).

  NOTE: For situations where CMA support is not required, the outer CMA mounting brackets can be uninstalled from the sliding rails. This reduces the overall length of the rails and eliminates the potential interferences with rear mounted PDUs or the rear rack door.

Scan the QRL code for the documentation and trouble-shooting information regarding the installation procedures for Drop-in/Stab-in rail types.

Figure 28. Quick resource locator for combo rails

A14 static rails summary

The static rails offer a greater adjustability range and a smaller overall mounting footprint than the sliding rails because of their reduced complexity and lack of need for CMA support. The static rails support a wider variety of racks than the sliding rails. However, they do not support serviceability in the rack and are thus not compatible with the CMA. The static rails are also not compatible with SRB.

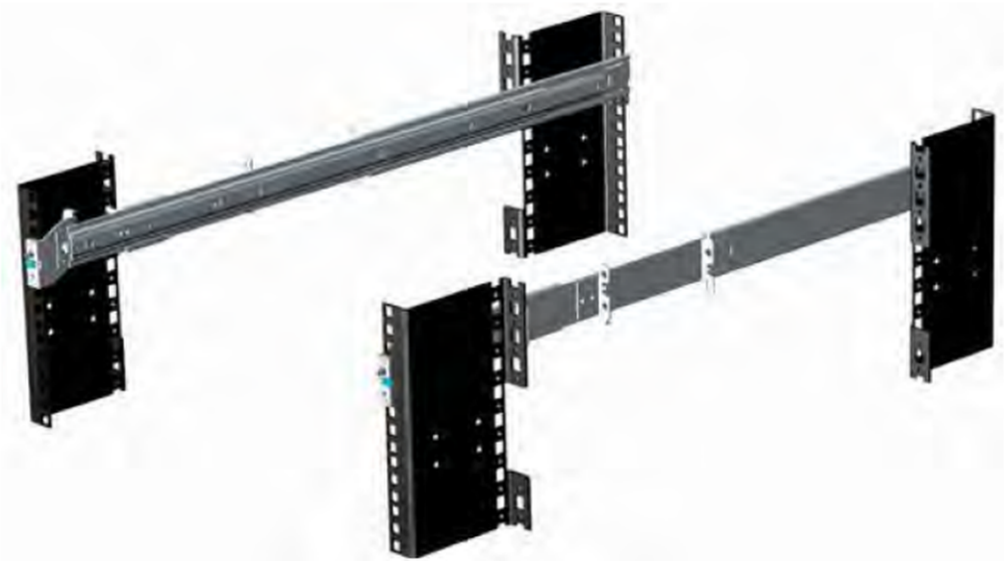

Figure 29. Static rails

Static rails features summary

Static rails for 4-post & 2-post racks:

- Supports stab-in installation of the chassis to the rails.
- Support tool-less installation in 19" EIA-310-E compliant square or un-threaded round hole 4-post racks including all generations of Dell racks.
- Support tooled installation in 19" EIA-310-E compliant threaded hole 4-post and 2-post racks.
- Support for tooled installation in Dell Titan or Titan-D rack.

NOTE:

- Screws are not included with the static rail kit since racks are offered with various thread types. The screws are provided for mounting static rails in racks with threaded mounting flanges.
- Screw head diameter should be 10 mm or less.

2-Post racks installation

If installing to 2-Post (Telco) racks, the ReadyRails static rails (A14) must be used. Sliding rails support mounting in 4-post racks only.

Figure 30. Static rails in 2-post center mount configuration

Installation in the Dell Titan or Titan-D racks

For tool-less installation in Titan or Titan-D racks, the Stab-in/Drop-in Sliding rails (A16) must be used. This rail collapses down sufficiently to fit in the rack with mounting flanges that are spaced about 24 inches apart from front to back. The Stab-in/Drop-in Sliding rail allows bezels of the servers and storage systems to be aligned when installed in these racks. For tooled installation, Stab-in Static rails (A14) must be used for bezel alignment with Storage systems.

Cable management arm (CMA)

The optional cable management arm (CMA) organizes and secures the cords and cables exiting the back of the systems. It unfolds to allow the systems to extend out of the rack without having to detach the cables. Some key features of the CMA include:

- Large U-shaped baskets to support dense cable loads.
- Open vent pattern for optimal airflow.
- Ability to mount on either side by swinging the spring-loaded brackets from one side to the other.
- Utilizes hook-and-loop straps rather than plastic tie wraps to eliminate the risk of cable damage during cycling.
- Includes a low-profile fixed tray to both support and retain the CMA in its fully closed position.
- Both the CMA and the tray mount without the use of tools by simple and intuitive snap-in designs.

NOTE: CMA is not supported in Direct Liquid Cooling configuration.

The CMA can be mounted to either side of the sliding rails without the use of tools or the need for conversion. For systems with one power supply unit (PSU), it is recommended to mount on the side opposite to that of the power supply to allow easier access to it and the rear drives (if applicable) for service or replacement.

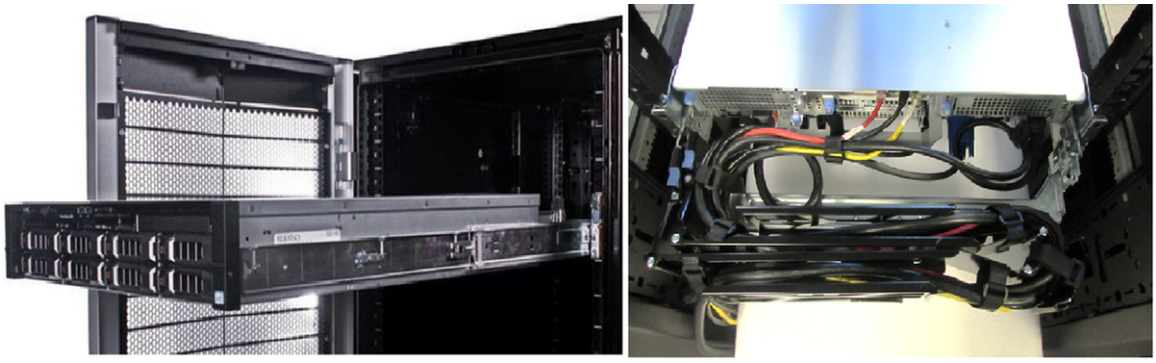

Figure 31. Sliding rails with CMA cabling

Strain Relief Bar (SRB)

The optional strain relief bar (SRB) for the PowerEdge R6615 organizes and supports cable connections at the rear end of the server to avoid damage from bending.

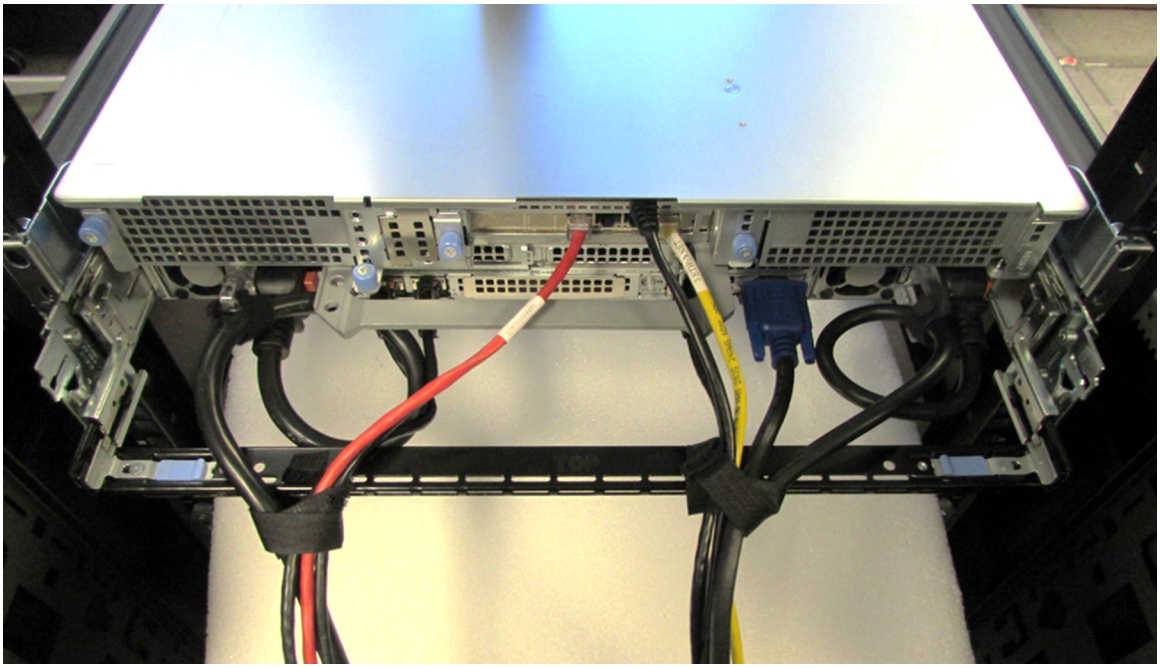

Figure 32. Cabled strain relief bar

- Tool-less attachment to the rails
- Two depth positions to accommodate various cable loads and rack depths
- Supports cable loads and controls stresses on server connectors
- Cables can be separated into discrete purpose-specific bundles

Rack Installation

Drop-in design means that the system is installed vertically into the rails by inserting the standoffs on the sides of the system into the J-slots in the inner rail members with the rails in the fully extended position. The recommended method of installation is to first insert the rear standoffs on the system into the rear J-slots on the rails to free up a hand and then rotate the system down into the remaining J-slots while using the free hand to hold the rail against the side of the system.

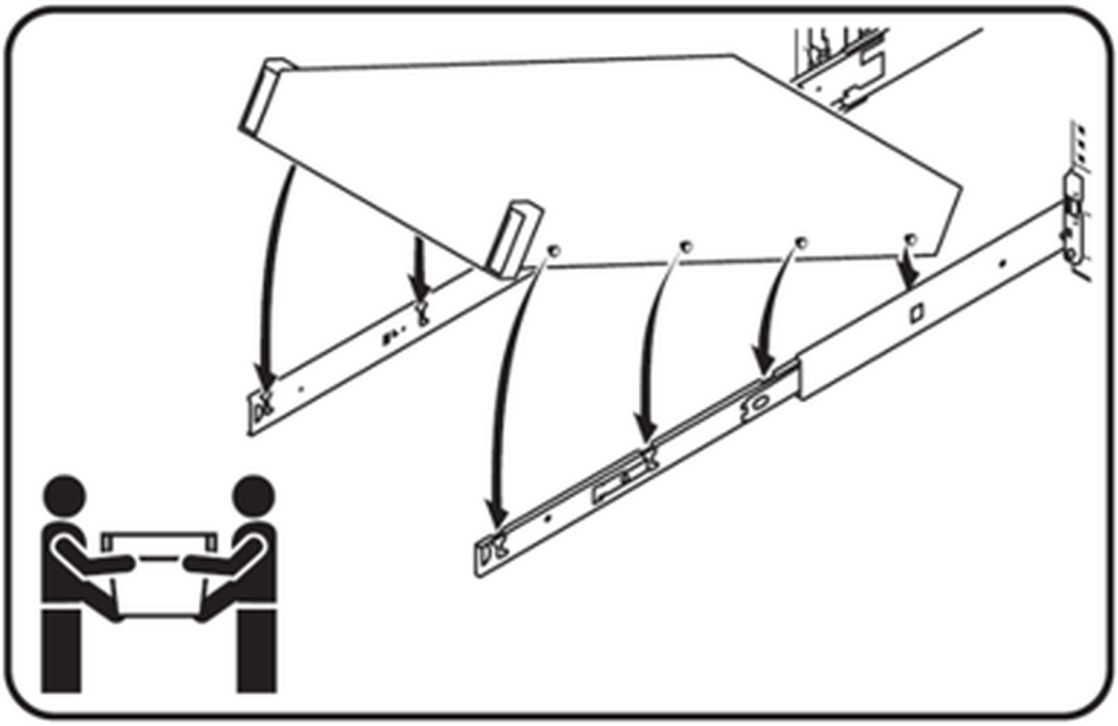

Figure 33. Installing the system in Drop-in sliding rails

Stab-in design means that the inner (chassis) rail members must first be attached to the sides of the system and then inserted into the outer (cabinet) members installed in the rack. For a 2U systems, this is a two person lift.

Installing system into the rack (option A: Drop-In)

1. Pull the inner rails out of the rack until they lock into place.

Figure 34. Pull out inner rail

2. Locate the rear rail standoff on each side of the system and lower them into the rear J-slots on the slide assemblies.
3. Rotate the system downward until all the rail standoffs are seated in the J-slots.

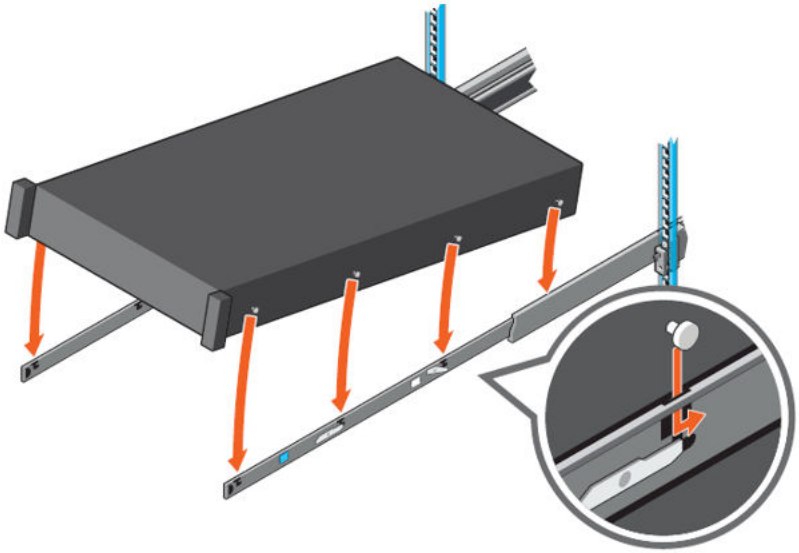

Figure 35. Rail standoffs seated in J-slots

4. Push the system inward until the lock levers click into place.
5. Pull the blue side release lock tabs forward or backward on both rails and slide the system into the rack until the system is in the rack.

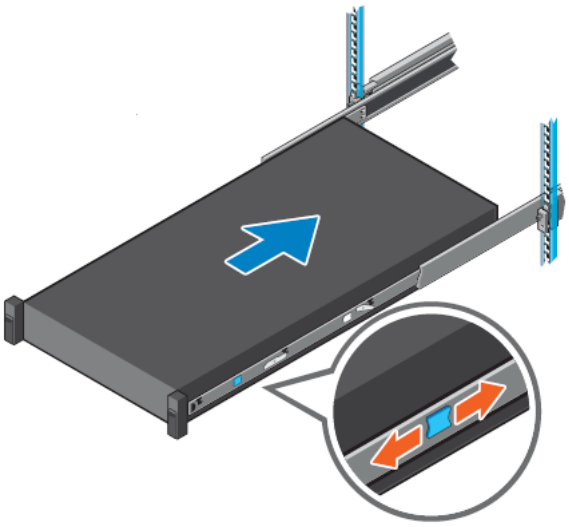

Figure 36. Slide system into the rack

Installing the system into the rack (option B: Stab-In)

1. Pull the intermediate rails out of the rack until they lock into place.
2. Release the inner rail lock by pulling forward on the white tabs and sliding the inner rail out of the intermediate rails.

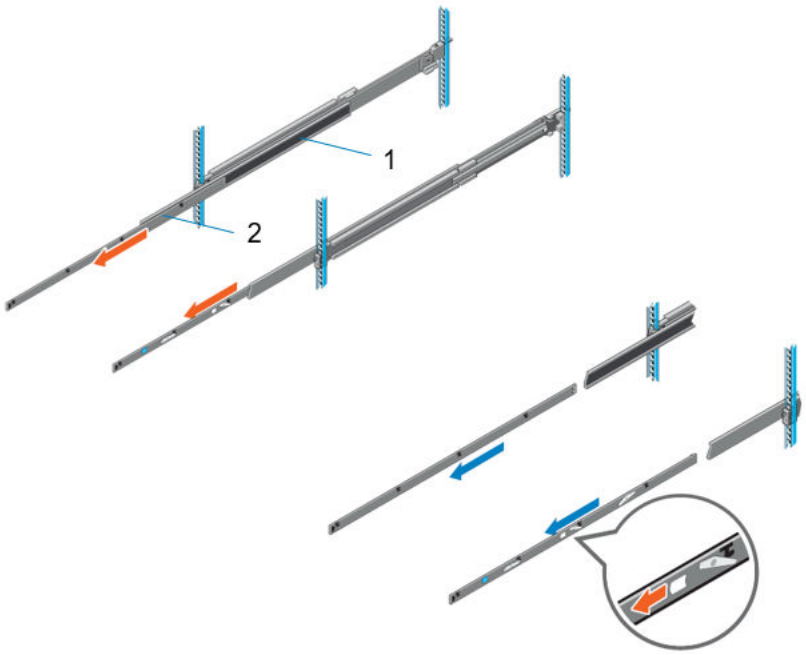

Figure 37. Pull out the intermediate rail

Table 23. Rail component label

Number	Component
1	Intermediate rail
2	Inner rail

3. Attach the inner rails to the sides of the system by aligning the J-slots on the rail with the standoffs on the system and sliding forward on the system until they lock into place.

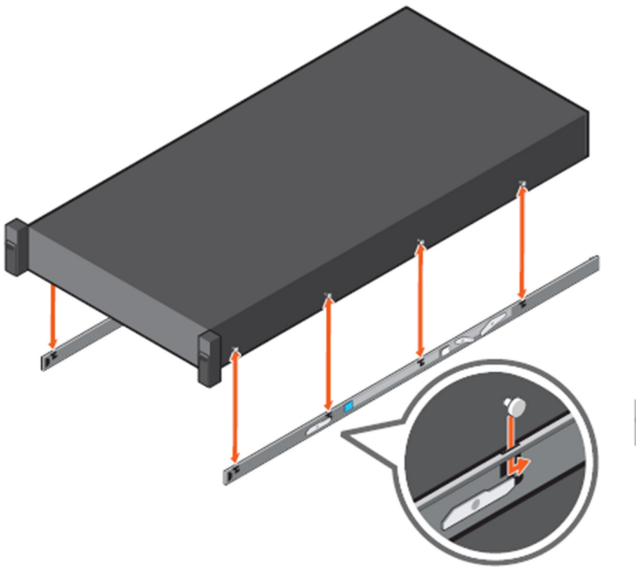

Figure 38. Attach the inner rails to the system

4. With the intermediate rails extended, install the system into the extended rails.

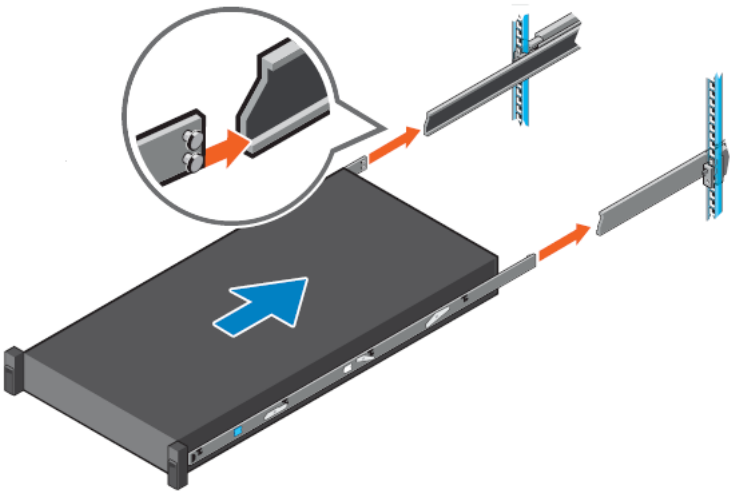

Figure 39. Install system into the extended rails

5. Pull blue slide release lock tabs forward or backward on both rails, and slide the system into the rack.

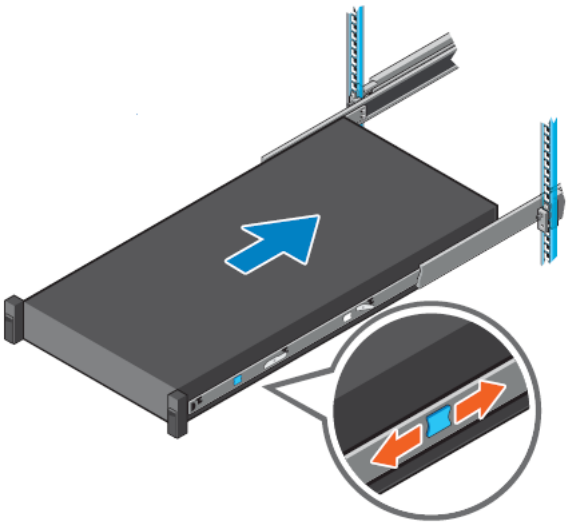

Figure 40. Slide system into the rack

11

Operating Systems and Virtualization

Topics:

- Supported Operating Systems

Supported Operating Systems

The PowerEdge system supports the following operating system:

- Canonical Ubuntu Server LTS
- Microsoft Windows Server with Hyper-V
- Red Hat Enterprise Linux
- SUSE Linux Enterprise Server
- VMware vSAN/ESXi

Links to specific OS versions and editions, certification matrices, Hardware Compatibility Lists (HCL) portal, and Hypervisor support are available at Dell Enterprise Operating Systems.

12

Dell OpenManage Systems Management

Dell delivers management solutions that help IT administrators effectively deploy, update, monitor, and manage IT assets. OpenManage solutions and tools enable you to quickly respond to problems by helping them to manage Dell servers efficiently; in physical, virtual, local, and remote environments; all without the need to install an agent in the operating system.

The OpenManage portfolio includes:

- Innovative embedded management tools - integrated Dell Remote Access Controller (iDRAC)
- Consoles - OpenManage Enterprise
- Extensible with plug-ins - OpenManage Power Manager
- Update tools - Repository Manager

Dell has developed comprehensive systems management solutions that are based on open standards and has integrated with management consoles from partners such as Microsoft and VMware, allowing advanced management of Dell servers. Dell management capabilities extend to offerings from the industry's top systems management vendors and frameworks such as Ansible, Splunk, and ServiceNow. OpenManage tools automate the full span of server life cycle management activities along with powerful RESTful APIs to script or integrate with your choice of frameworks.

For more information about the entire OpenManage portfolio, see:

- The latest Dell Systems Management Overview Guide.

Topics:

- Integrated Dell Remote Access Controller (iDRAC)
- Systems Management software support matrix

Integrated Dell Remote Access Controller (iDRAC)

iDRAC9 delivers advanced, agent-free, local and remote server administration. Embedded in every PowerEdge server, iDRAC9 provides a secure means to automate a multitude of common management tasks. Because iDRAC is embedded within every PowerEdge server, there is no additional software to install; just plug in power and network cables, and iDRAC is ready to go. Even before installing an operating system (operating system) or hypervisor, IT administrators have a complete set of server management features at their fingertips.

With iDRAC9 in-place across the Dell PowerEdge portfolio, the same IT administration techniques and tools can be applied throughout. This consistent management platform allows easy scaling of PowerEdge servers as an organization's infrastructure grows. Customers can use the iDRAC RESTful API for the latest in scalable administration methods of PowerEdge servers. With this API, iDRAC enables support for the Redfish standard and enhances it with Dell extensions to optimize at-scale management of PowerEdge servers. By having iDRAC at the core, the entire OpenManage portfolio of Systems Management tools allows every customer to tailor an effective, affordable solution for any size environment.

Zero Touch Provisioning (ZTP) is embedded in iDRAC. ZTP - Zero Touch Provisioning is Intelligent Automation Dell's agent-free management puts IT administrators in control. Once a PowerEdge server is connected to power and networking, that system can be monitored and fully managed, whether you're standing in front of the server or remotely over a network. In fact, with no need for software agents, an IT administrator can: · Monitor · Manage · Update · Troubleshoot and remediate Dell servers With features like zero-touch deployment and provisioning, iDRAC Group Manager, and System Lockdown, iDRAC9 is purpose-built to make server administration quick and easy. For those customers whose existing management platform utilizes in-band management, Dell does provide iDRAC Service Module, a lightweight service that can interact with both iDRAC9 and the host operating system to support legacy management platforms.

When ordered with DHCP enabled from the factory, PowerEdge servers can be automatically configured when they are initially powered up and connected to your network. This process uses profile-based configurations that ensure each server is configured per your specifications. This feature requires an iDRAC Enterprise license.

iDRAC9 offers following license tiers:

Table 24. iDRAC9 license tiers

License	Description
iDRAC9 Basic	• Available only on 100-500 series rack/tower • Basic instrumentation with iDRAC web UI • For cost conscious customers that see limited value in management
iDRAC9 Express	• Default on 600+ series rack/tower, modular, and XR series • Includes all features of Basic • Expanded remote management and server life-cycle features
iDRAC9 Enterprise	• Available as an upsell on all servers • Includes all features of Basic and Express. Includes key features such as virtual console, AD/LDAP support, and more • Remote presence features with advanced, Enterprise-class, management capabilities
iDRAC9 Datacenter	• Available as an upsell on all servers • Includes all features of Basic, Express, and Enterprise. Includes key features such as telemetry streaming, Thermal Manage, automated certificate management, and more • Extended remote insight into server details, focused on high end server options, granular power, and thermal management

For a full list of iDRAC features by license tier, see Integrated Dell Remote Access Controller 9 User's Guide at Dell.com.

For more details on iDRAC9 including white papers and videos, see:

- Support for Integrated Dell Remote Access Controller 9 (iDRAC9) on the Knowledge Base page at Dell.com

Systems Management software support matrix

Table 25. Systems Management software support matrix

Categories	Features	PE mainstream
Embedded Management and In-band Services	iDRAC9 (Express, Enterprise, and Datacenter licenses)	Supported
	OpenManage Mobile	Supported
	OM Server Administrator (OMSA)	Supported
	iDRAC Service Module (iSM)	Supported
	Driver Pack	Supported
Change Management	Update Tools (Repository Manager, DSU, Catalogs)	Supported
	Server Update Utility	Supported
	Lifecycle Controller Driver Pack	Supported
	Bootable ISO	Supported
Console and Plug-ins	OpenManage Enterprise	Supported
	Power Manager Plug-in	Supported
	Update Manager Plug-in	Supported
	SupportAssist Plug-in	Supported
	CloudIQ	Supported
Integrations and connections	OM Integration with VMware Vcenter/vROps	Supported
	OM Integration with Microsoft System Center (OMIMSC)	Supported
	Integrations with Microsoft System Center and Windows Admin Center (WAC)	Supported

Table 25. Systems Management software support matrix (continued)

Categories	Features	PE mainstream
	ServiceNow	Supported
	Ansible	Supported
	Third-party Connectors (Nagios, Tivoli, Microfocus)	Supported
Security	Secure Enterprise Key Management	Supported
	Secure Component Verification	Supported
Standard operating system	Red Hat Enterprise Linux, SUSE, Windows Server 2021 Ubuntu, CentOS	Supported (Tier-1)

13

Appendix D: Service and support

Topics:

- Default support levels
- Other services and support information

Default support levels

This system offers 3 years Dell ProSupport Next Business Day (NBD), including 24x7 phone support and NBD parts and labor support.

Default deployment levels

This system offers **Dell Basic Deployment**, including onsite hardware installation during business hours with packaging materials disposal. Optionally, the customer may choose to any of the factory or field deployment offers listed below.

Other services and support information

Dell Technologies Services include a wide, customizable range of service options to simplify the assessment, design, implementation, management and maintenance of IT environments and to help transition from platform to platform.

Depending on the current business requirements and correct level of service for customers, we provide factory, onsite, remote, modular, and specialized services that fit the customer requirements and budget. We will help with a little or a lot, based on the customers choice, and provide access to our global resources.

Dell deployment services

Dell ProDeploy Infrastructure Suite

ProDeploy Infrastructure Suite provides a variety of deployment offerings that satisfy a customer's unique needs. It is made up of 5 offers: ProDeploy Configuration Services, ProDeploy Rack Integration Services, Basic Deployment, ProDeploy, and ProDeploy Plus.

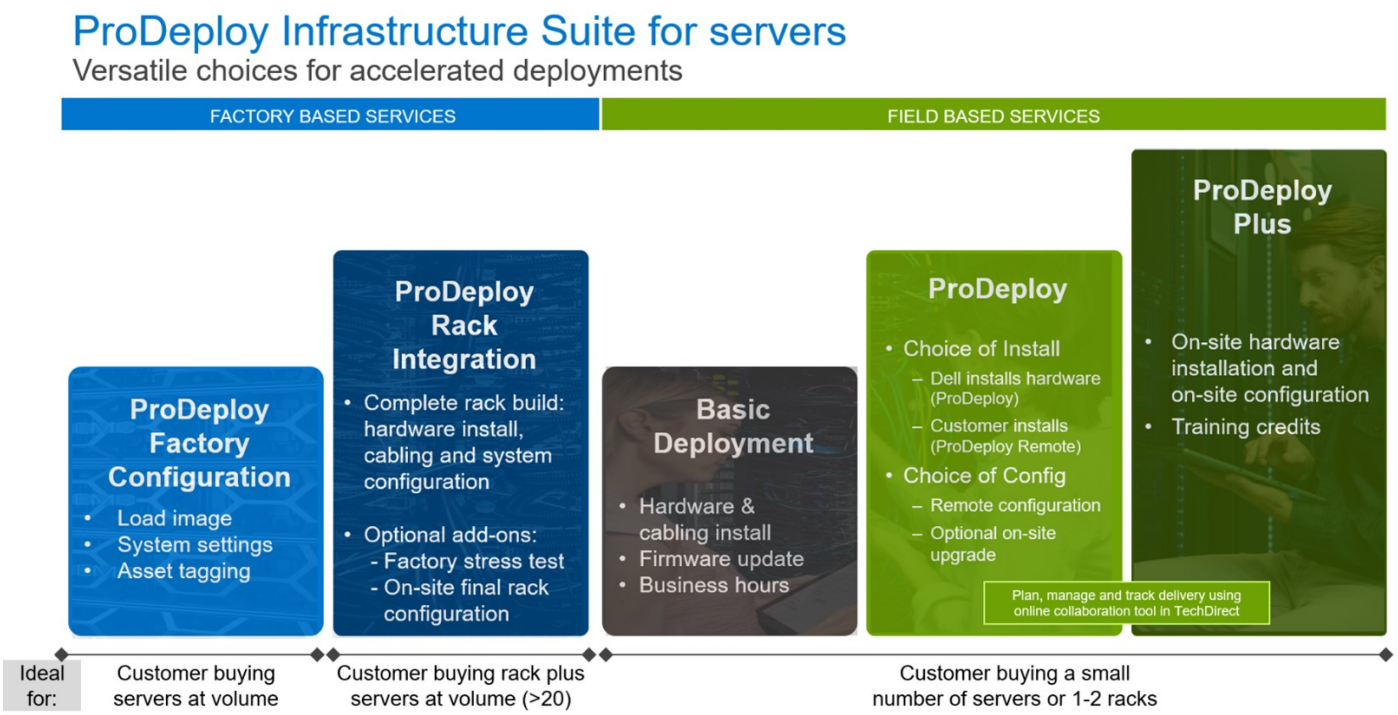

Figure 41. ProDeploy Infrastructure Suite for servers

The new Factory Services consist of two tiers of deployment that happen prior to shipping to the customer's site.

Factory Based Services:

- ProDeploy Factory Configuration - Ideal for customers buying servers in volume and seeking pre-configuration prior to shipping such as: custom image, system settings, and asset tagging so it arrives ready to use out of the box. Furthermore, servers can be packaged and bundled to meet specific shipping and distribution requirements for each customer location to facilitate the rollout process. Upsell one of the field based services (below) if a customer needs assistance with the final server installation.
- ProDeploy Rack Integration - Ideal for customers seeking to build out fully integrated racks prior to shipping. These rack builds include hardware install, cabling, and full system configuration. You can also add-on a factory stress test and optional on-site final rack configuration to complete the rack installation.
  - STANDARD SKUs for Rack Integration is available in US only and requires:
    - 20 or more devices (R and C series servers and all Dell or non-Dell switches). Use Informational SKUs for Dell switches or 3rd party products
    - Shipping to contiguous US
  - USE CUSTOM QUOTE for Rack Integration for:
    - All countries except USA
    - Racks containing less than 20 servers
    - Any rack that includes VxRail or Storage
    - Shipping outside contiguous US
    - Shipping to multiple locations

Field Based Services:

- Basic Deployment consists of the hardware installation, cabling and firmware update during normal standard business hours. Basic Deployment is traditionally sold to Competency Enabled Partners. Competency enabled partners often have Dell do the hardware installation while they complete the software configuration.
- ProDeploy consists of your hardware installation and configuration of the software using offshore resources. ProDeploy is great for customers who are price sensitive or who are remote from their data centers and don't require an onsite presence.
- ProDeploy Plus will give you in-region or onsite resources to complete the engagement for the customer. It also comes with additional features such as Post Deployment Configuration Assistance and Training Credits.

ProDeploy Infrastructure Suite | Factory services

		FACTORY BASED SERVICES	
		ProDeploy Factory Configuration	ProDeploy Rack Integration
Asset configuration	Single point of contact for project management	●	●
	RAID, BIOS and iDRAC configuration	●	●
	Firmware freeze	●	●
	Asset Tagging and Reporting	●	●
	Customer system image	●	●
Factory implementation	Site readiness review and implementation planning	-	●
	Hardware racking and cabling	-	●
	SAM engagement for ProSupport Plus entitled accounts/devices	-	●
	Deployment verification, documentation, and knowledge transfer	●	●
Delivery	White glove logistics	-	●
	Onsite final configuration	-	Onsite add-on
	Install support software and connect with Dell Technologies	-	Onsite add-on
	Basic Deployment	Optional onsite installation	-
Online oversight	Online collaborative environment for planning, managing and tracking delivery	-	●

1 ProDeploy Rack Integration Services are currently only available within the United State Custom rack integration services are still available globally*

DELL Technologies

Figure 42. ProDeploy Infrastructure Suite - Factory services

ProDeploy Infrastructure Suite | Field services

		Basic Deployment	ProDeploy	ProDeploy Plus
Pre-deployment	Single point of contact for project management	●	●	In-region
	Site readiness review	-	●	●
	Implementation planning[1]	-	●	●
	SAM engagement for ProSupport Plus entitled devices	-	-	●
Deployment	Deployment service hours	Business hours	24x7	24x7
	Onsite hardware installation and packaging material removal[2] or remote guidance for hardware installation[1]	●	Remote guidance or onsite	Onsite
	Install and configure system software	-	Remote	Onsite
	Install support software and connect with Dell Technologies	-	●	●
	Project documentation with knowledge transfer	-	●	●
Post- deployment	Deployment verification	-	●	●
	Configuration data transfer to Dell Technologies technical support	-	●	●
	30-days of post-deployment configuration assistance	-	-	●
	Training credits for Dell Technologies Education Services	-	-	●
Online oversight	Online collaborative environment in TechDirect for planning, managing and tracking delivery[3]	-	●	●

[1] Remote option includes project specific instructions, documentation and live expert guidance for hardware installation. Option available for select hardware. List is available in the backup portion of this customer presentation
[2] Packaging removal included with onsite hardware installation
[3] Included with ProDeploy or ProDeploy Plus, Not included with Basic Deployment

Figure 43. ProDeploy Infrastructure Suite - Field services

Dell ProDeploy Plus for Infrastructure

From beginning to end, ProDeploy Plus provides the skill and scale that is must successfully perform demanding deployments in today's complex IT environments. Certified Dell experts start with extensive environmental assessments and detailed migration

planning and recommendations. Software installation includes set up of our enterprise connectivity solution (secure connect gateway) and OpenManage system management utilities.

Postdeployment configuration assistance, testing, and product orientation services are also available.

Dell ProDeploy for Infrastructure

ProDeploy provides full-service installation and configuration of both server hardware and system software by certified deployment engineers including set up of leading operating systems and hypervisors as well our enterprise connectivity solution (secure connect gateway) and OpenManage system management utilities. To prepare for the deployment, we conduct a site readiness review and implementation planning exercise. System testing, validation, and full project documentation with knowledge transfer complete the process.

Dell Basic Deployment

Basic Deployment delivers worry-free professional installation by experienced technicians who know Dell servers inside and out.

Additional Deployment Services

You can tailor the ProDeploy Infrastructure Suite offer to meet your customer's unique needs by leveraging "Additional Deployment Time." ADT will cover additional tasks above the normal scope of the standard offers. ADT can be sold for Project Management or Technical Resources and is sold as blocks of four hours remote or eight hours on-site.

Dell ProDeploy for HPC (available in US/Canada only. All other regions use custom)

HPC deployments require specialists that understand that cutting edge is yesterday's news. Dell deploys the world 's fastest systems and understands the nuances that make them perform. ProDeploy for HPC provides:

- Global team of dedicated HPC specialists
- Proven track record, thousands of successful HPC deployments
- Design validation, benchmarking, and product orientation

Learn more at Dell.com/HPC-Services.

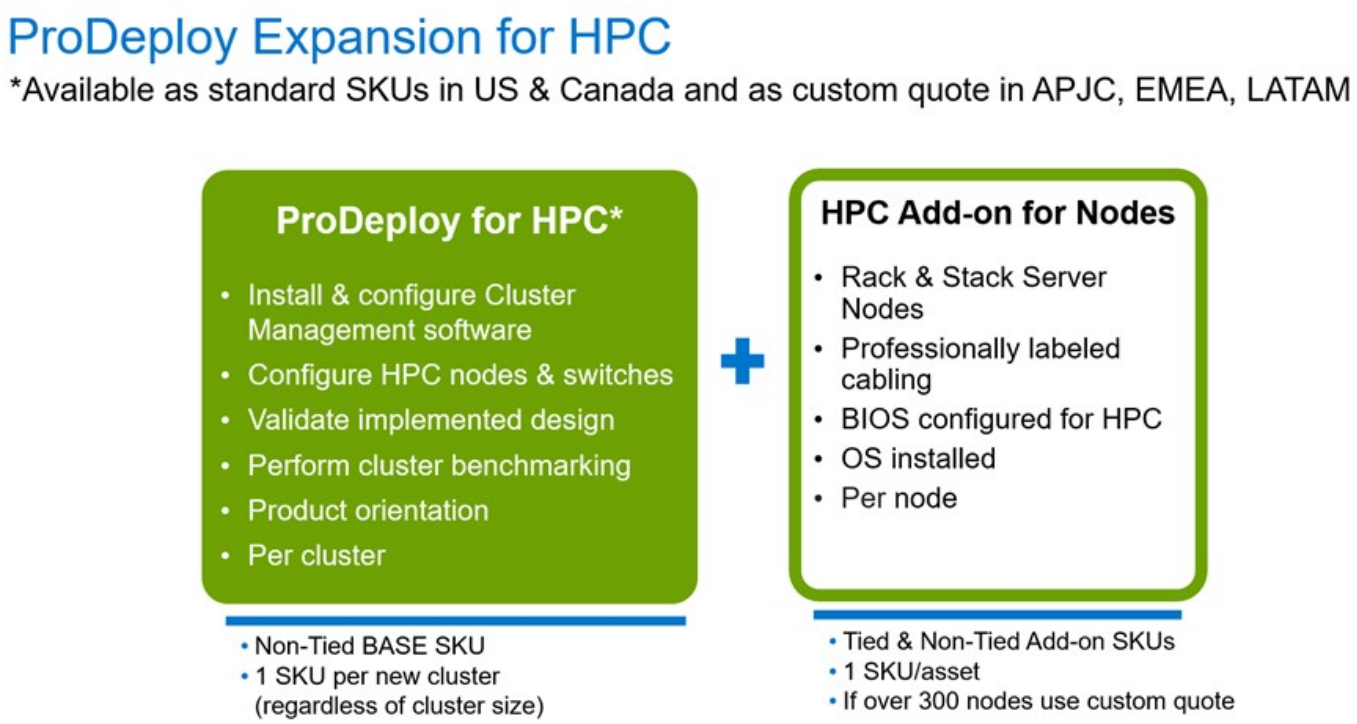

Figure 44. ProDeploy Expansion for HPC

Dell custom deployment Services

Dell custom rack integration and other Dell configuration services help customers save time by providing systems that are racked, cabled, tested, and ready to be integrated into the data center. Dell support preconfigure RAID, BIOS and iDRAC settings, install system images, and even install third-party hardware and software.

For more information, see Server Configuration Services.

Dell Residency Services

Residency Services help customers transition to new capabilities quickly with the assistance of onsite or remote Dell experts whose priorities and time they control.

Residency experts can provide post implementation management and knowledge transfer that is related to a new technology acquisition or day-to-day operational management of the IT infrastructure.

Dell Data Migration Services

Protect business and data of the customer with our single point of contact to manage data migration projects.

A customer project manager works with our experienced team of experts to create a plan using industry-leading tools and proven processes that are based on global best practices to migrate existing files and data, so business systems are up and running quickly and smoothly.

Dell Enterprise Support Services

Dell ProSupport Enterprise Suite

With the ProSupport Enterprise Suite, we help keep IT systems running smoothly, so customers can focus on running their business. We help maintain peak performance and availability of the most essential workloads. ProSupport Enterprise Suite is a suite of support services that enable customers to build the solution that is right for their organization. They choose support models that are based on how they use technology and where they want to allocate resources. From the desktop to the data center, address everyday IT challenges, such as unplanned downtime, mission-critical needs, data and asset protection, support planning, resource allocation, software application management and more. Optimize customer IT resources by choosing the right support model.

Table 26. ProSupport Enterprise Suite

Service	Support model	Description
ProSupport Enterprise Suite	ProSupport Plus for Enterprise	Proactive, predictive, and reactive support for systems that look after your business-critical applications and workloads
	ProSupport for Enterprise	Comprehensive 24 x 7 predictive and reactive support for hardware and software
	Basic hardware support	Reactive hardware support during normal business hours

Dell ProSupport Plus for Enterprise

When customers purchase PowerEdge server, we recommend ProSupport Plus, our proactive and preventative support service for business-critical systems. ProSupport Plus provides all the benefits of ProSupport, plus the following:

- An assigned Services Account Manager who knows their business and environment
- Immediate advanced troubleshooting from an engineer
- Personalized, preventive recommendations that are based on analysis of support trends and best practices from across the Dell Technologies infrastructure solutions customer base to reduce support issues and improve performance
- Predictive analysis for issue prevention and optimization that is enabled by secure connect gateway technology
- Proactive monitoring, issue detection, notification, and automated case creation for accelerated issue resolution enabled by secure connect gateway
- On-demand reporting and analytics-based recommendations that are enabled by secure connect gateway and TechDirect

Dell ProSupport for Enterprise

ProSupport service offers highly trained experts around the clock and around the globe to address IT needs. We help minimize disruptions and maximize availability of PowerEdge server workloads with:

- 24x7 support through phone, chat and online
- Predictive, automated tools and innovative technology
- A central point of accountability for all hardware and software issues
- Collaborative third-party support
- Hypervisor, operating system and application support
- Consistent experience regardless of where customers are located or what language they speak

  NOTE: Subject to service offer country or region availability.
- Optional onsite parts and labor response options including next business day or four-hour mission critical

ProSupport Enterprise Suite
Feature Comparison

	Basic	ProSupport	ProSupport Plus
Remote technical support	9x5	24x7	24x7
Covered products	Hardware	Hardware Software	Hardware Software
Onsite hardware support	Next business day	Next business day or 4hr mission critical	Next business day or 4 hr mission critical
3rd party collaborative assistance		●	●
Self-service case initiation and management		●	●
Access to software updates		●	●
Proactive storage health monitoring, predictive analytics and anomaly detection with CloudIQ and the CloudIQ mobile app		●	●
Priority access to specialized support experts			●
Predictive detection of hardware failures			●
3rd party software support			●
An assigned Service Account Manager			●
Proactive, personalized assessments and recommendations			●
Proactive systems maintenance			●

Availability and terms of Dell Technologies Services vary by region and by product. For more information, please view our service descriptions.

DELL Technologies

Figure 45. ProSupport Enterprise Suite

Dell ProSupport One for Data Center

ProSupport One for Data Center offers flexible site-wide support for large and distributed data centers with more than 1,000 assets. This offering is built on standard ProSupport components that leverage our global scale but are tailored to a customer's needs. While not for everyone, this service option offers a truly unique solution for Dell Technologies largest customers with the most complex environments.

- Team of assigned Services Account Managers with remote, on-site options
- Assigned ProSupport One technical and field engineers who are trained on the customer's environment and configurations
- On-demand reporting and analytics-based recommendations that are enabled by secure connect gateway and TechDirect
- Flexible on-site support and parts options that fit their operational model
- A tailored support plan and training for their operations staff

Dell ProSupport Add-on for HPC

The ProSupport Add-on for HPC provides solution-aware support including:

- Access to senior HPC experts
- Advanced HPC cluster assistance: performance, interoperability, and configuration
- Enhanced HPC solution level end-to-end support
- Remote presupport engagement with HPC Specialists during ProDeploy implementation

Learn more at Dell.com/HPC-Services.

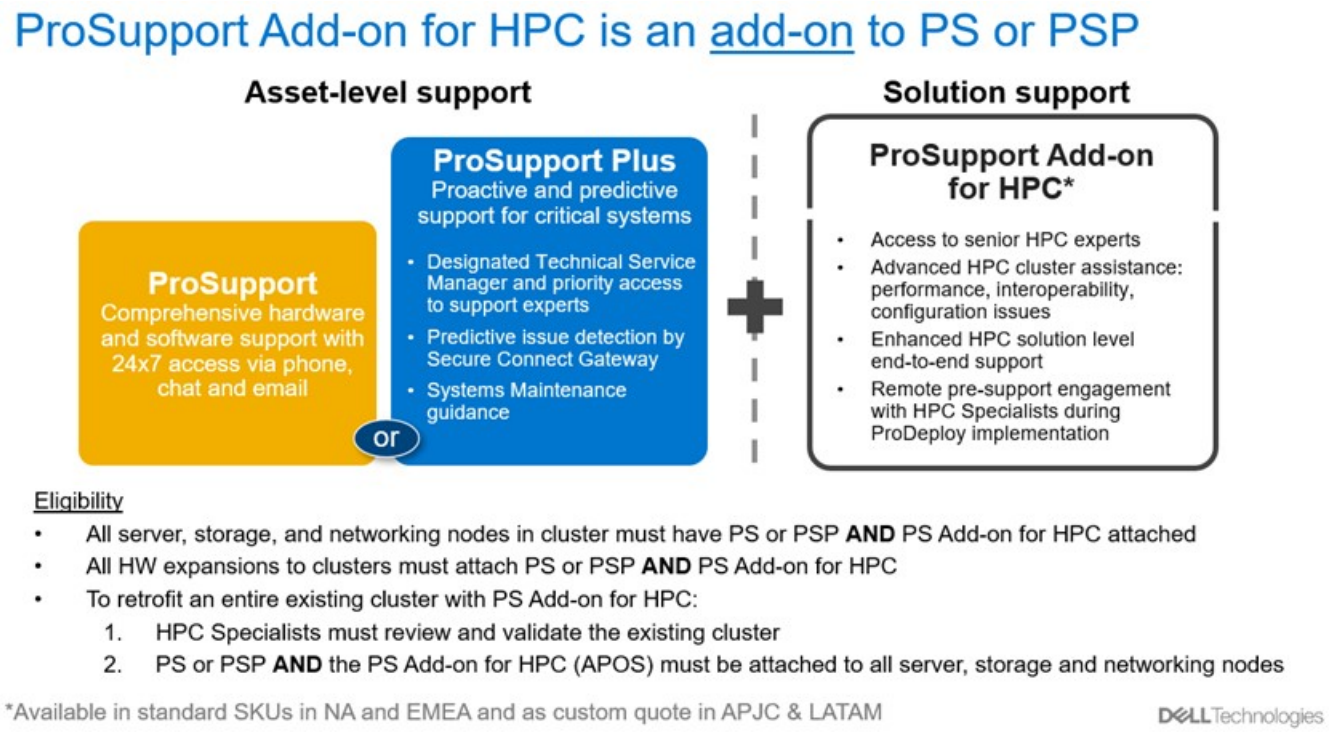

Figure 46. ProSupport Add-on for HPC is an add-on to PS or PSP

Support Technologies

Powering the support experience with predictive, data-driven technologies.

NOTE: SupportAssist Enterprise capabilities are now part of the secure connect gateway technology.

Enterprise connectivity

The best time to solve a problem is before it happens. The automated proactive and predictive support features enabled by the secure connect gateway technology helps reduce steps and time to resolution, often detecting issues before they become a crisis. The gateway technology is available in virtual and application editions. It is also implemented as a direct connect version for select Dell hardware and a Services plugin within OpenManage Enterprise for PowerEdge servers. The legacy SupportAssist Enterprise solution has been retired and is now replaced by the secure connect gateway solutions.

Benefits include:

- Value: Our connectivity solutions are available to all customers at no additional charge
- Improve productivity: Replace manual, high-effort routines with automated support
- Accelerate time to resolution: Receive issue alerts, automatic case creation, and proactive contact from Dell experts
- Gain insight and control: Optimize enterprise devices with insights in portals reporting like TechDirect, and get predictive issue detection before the problem starts

NOTE: Connect devices can access these features. Features vary depending on the service level agreement for the connected device. ProSupport Plus customers experience the full set of automated support capabilities.

Table 27. Features enabled by connectivity

—	Basic hardware warranty	ProSupport	ProSupport Plus
Automated issue detection and system state information collection	Supported	Supported	Supported
Proactive, automated case creation and notification	Not supported	Supported	Supported

Table 27. Features enabled by connectivity (continued)

—	Basic hardware warranty	ProSupport	ProSupport Plus
Predictive issue detection for failure prevention	Not supported	Not supported	Supported

Get started at DellTechnologies.com/secureconnectgateway.

Dell TechDirect

TechDirect helps boost IT team productivity when supporting Dell systems.

Boost your productivity with online servoce for Dell products from TechDirect. From deployment to technical support, TechDirect lets you do more with less effort and faster resolution. You can:

- OPen and manage support requests or in-warranty systems
- Execute online self-service for parts dispatch
- Collaborate on ProDeploy infrastructure deployment projects online
- Manage proactive and preditive alerts from secure connect gateway technology that help maximize uptime
- Integrate services functionality into your help desk with TechDirect APIs
- Join over 10,000 companies that choose TechDirect

Register at TechDirect.Dell.com.

Dell Technologies Consulting Services

Our expert consultants help customers transform faster, and quickly achieve business outcomes for the high value workloads Dell PowerEdge systems can handle. From strategy to full-scale implementation, Dell Technologies Consulting can help determine how to perform IT, workforce, or application transformation. We use prescriptive approaches and proven methodologies that are combined with portfolio and partner ecosystem of Dell Technologies to help achieve real business outcomes. From multi cloud, applications, DevOps, and infrastructure transformations, to business resiliency, data center modernization, analytics, workforce collaboration, and user experiences-we are here to help.

Dell Managed Services

Some customers prefer Dell to manage the complexity and risk of daily IT operations, Dell Managed Services utilizes proactive, AI enabled delivery operations and modern automation to help customers realize desired business outcomes from their infrastructure investments. With these technologies, our experts run, update and fine-tune customer environments aligned with service levels, while providing environment-wide and down-to-the-device visibility. There are two types of managed service offers. First the outsourcing model or CAPEX model where Dell manages the customer owned assets using our people and tools. The second is the as-a-Service model or OPEX model called APEX. In this service, Dell owns all technology and all the management of it. Many customers will have a blend of the two management types depending on the goals of the organization.

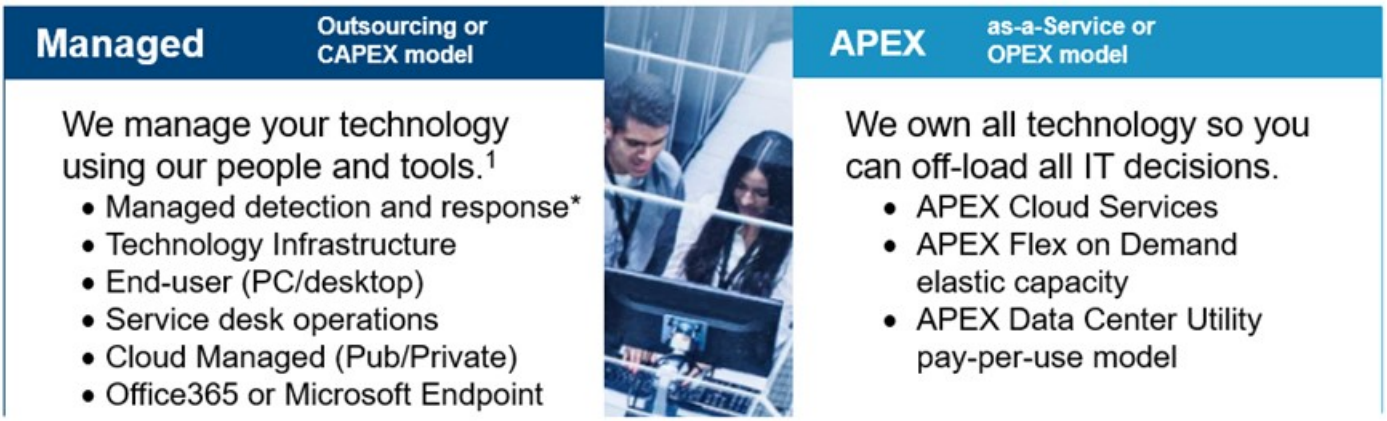

1 – Some minimum device counts may apply. Order via: ClientManagedServices.sales@dell.com

* Managed detection and response covers the security monitoring of laptops, servers, & virtual servers. Min. 50 devices combined. No Networking or Storage-only systems [SAN/NAS]. Available in 32 countries. Details here

Figure 47. Dell Managed Services

Dell Technologies Education Services

Build the IT skills required to influence the transformational outcomes of the business. Enable talent and empower teams with the right skills to lead and perform transformational strategy that drives competitive advantage. Leverage the training and certification required for real transformation.

Dell Technologies Education Services offers PowerEdge server training and certifications that are designed to help customers achieve more from their hardware investment. The curriculum delivers the information and the practical, firsthand skills that their team must confidently install, configure, manage, and troubleshoot Dell servers.

To learn more or register for a class today, see Education.Dell.com.

14

Appendix A. Additional specifications

Topics:

- Chassis dimensions
- System weight
- NIC port specifications
- Video specifications
- USB ports specifications
- PSU rating
- Environmental specifications

Chassis dimensions

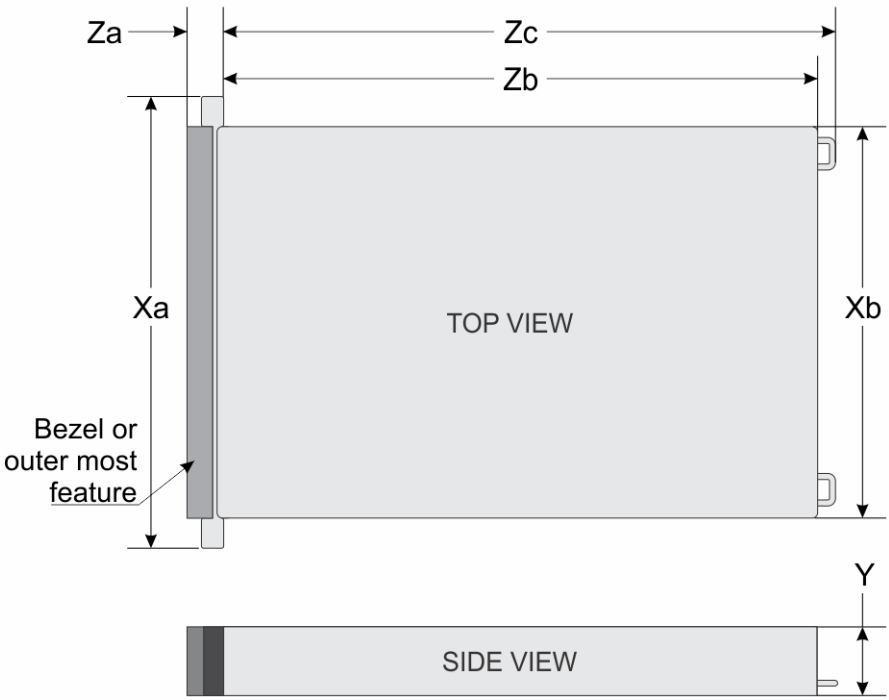

Figure 48. Chassis dimensions

Table 28. PowerEdge R6615 chassis dimensions

Xa	Xb	Y	Za	Zb	Zc
482.0 mm (18.97 inches)	434.0 mm (17.08 inches)	42.8 mm (1.685 inches)	35.84 mm (1.4 inches) With bezel 22.0 mm (0.87 inches) Without bezel	751.48 mm (29.59 inches) Ear to rear wall	787.05 mm (30.99 inches) Ear to PSU handle

NOTE: Zb is the nominal rear wall external surface where the system board I/O connectors reside.

System weight

Table 29. PowerEdge R6615 system weight

System configuration	Maximum weight (with all drives/SSDs)
A server with fully populated drives	20.2 kg (44.53 lbs)
A server without drives and PSU installed	17.4 kg (38.36 lbs)

NIC port specifications

The PowerEdge R6615 system supports up to two 10/100/1000 Mbps Network Interface Controller (NIC) ports embedded on the LAN on Motherboard (LOM) and integrated on the Open Compute Project (OCP) cards.

Table 30. NIC port specification for the system

Feature	Specifications
LOM card (optional)	1 GB x 2
OCP card (OCP 3.0) (optional)	1 GbE x 4, 10 GbE x 2, 10 GbE x 4, 25 GbE x 2, 25 GbE x 4

NOTE: The system allows either LOM card or an OCP card or both to be installed in the system.

NOTE: On the system board, the supported OCP PCIe width is x8; when x16 PCIe width is installed, it is downgraded to x8.

Video specifications

The platform supports the following video resolution and refresh rates:

Table 31. Video specifications for R6615

Resolution	Refresh Rate	Sestotal Freq.	Pixel Clock	DVO DisplayPort
1024 x 768	60 Hz	48.4 kHz	65.0 MHz	Yes*
1280 x 800	60 Hz	49.7 kHz	83.5 MHz	Yes*
1280 x 1024	60 Hz	64.0 kHz	108.0 MHz	Yes*
1360 x 768	60 Hz	47.71 kHz	85.5 MHz	Yes*
1440 x 900	60 Hz	55.9 kHz	106.5 MHz	Yes*
1600 x 900	60 Hz	55.54 kHz	97.75 MHz	Yes*
1600 x 1200	60 Hz	75.0 kHz	162.0 MHz	Yes*
1680 x 1050	60 Hz	64.7 kHz	119.0 MHz	Yes*
1920 x 1080	60 Hz (RB)	67.158 kHz	173.0 MHz	No
1920 x 1200	60 Hz (RB)	74.556 kHz	193.25 MHz	No

*DVO - DP is for investigation only, dependent on Nuvoton DVO capabilities to support up to 165 MHz.

*(RB) - Reduced Blanking for Digital Displays requiring less blank time. It was introduced for Signal Integrity improvements by reducing Pixel Clock rates for VGA- Analog input devices.

USB ports specifications

Table 32. PowerEdge R6615 USB specifications

Front		Rear		Internal (optional)	
USB port type	**No. of ports**	**USB port type**	**No. of ports**	**USB port type**	**No. of ports**
USB 2.0-compliant port	One	USB 3.0-compliant port	One	Internal USB 3.0-compliant port	One
iDRAC Direct port (Micro-AB USB 2.0-compliant port)	One	USB 2.0-compliant ports	One		

NOTE: The micro USB 2.0 compliant port can only be used as an iDRAC Direct or a management port.

Figure 49. R6615 Front USB

Figure 50. R6615 Rear USB

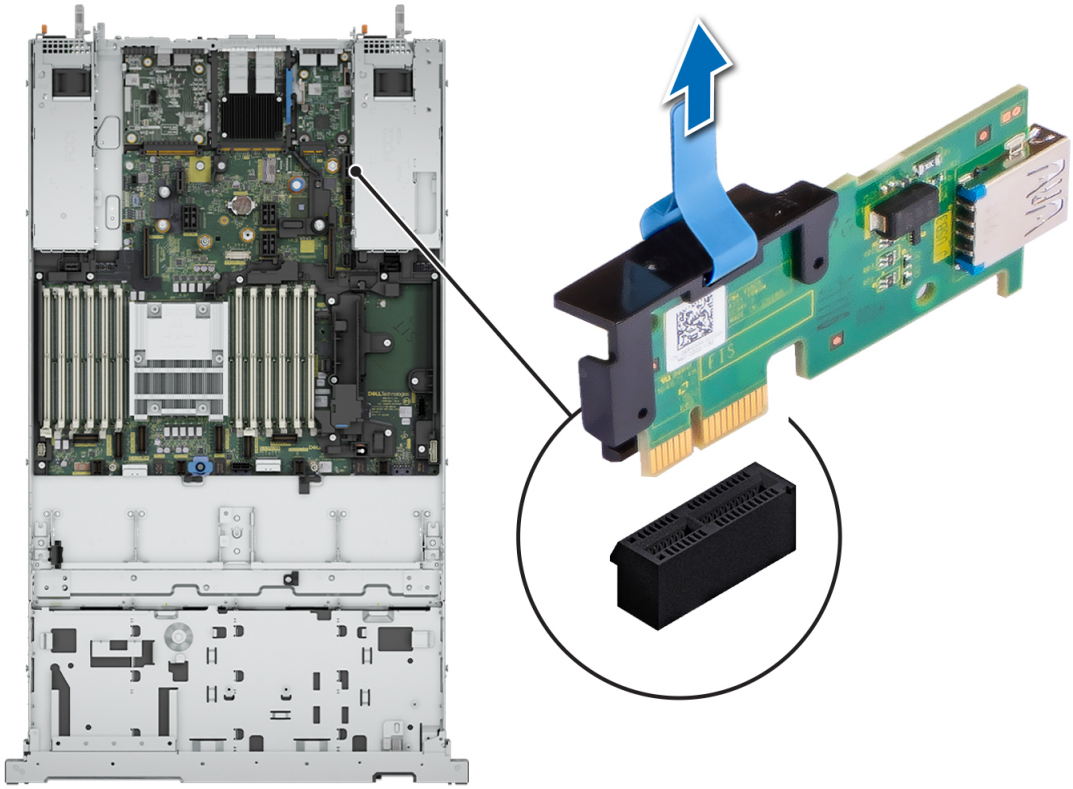

Figure 51. Internal USB Port

PSU rating

Table 33. PSUs Highline and Lowline ratings

Features	700 W Titanium	800 W Platinum	1100 W Titanium	1100 W -48VDC	1400 W Platinum	1800 W Platinum
Peak Power (Highline/-72 VDC)	1190 W	1360 W	1870 W	1870 W	2380 W	3060 W
Highline /-72 VDC	700 W	800 W	1100 W	1100 W	1400 W	1800 W
Peak Power (Lowline/-40 VDC)	N/A	1360 W	1785 W	N/A	1785 W	N/A
Lowline /-40 VDC	N/A	800 W	1050 W	N/A	1050 W	N/A
Highline 240 VDC	700 W	800 W	1100 W	N/A	1400 W	1800 W
DC -48-60 V	N/A	N/A	N/A	1100 W	N/A	N/A

The PowerEdge R6615 supports up to two AC or DC power supplies with 1+1 redundancy, autosensing, and auto-switching capability.

If two PSUs are present during POST, a comparison is made between the wattage capacities of the PSUs. In the event that the PSU wattages don't match, the larger of the two PSU's is enabled. Also, there is a PSU mismatch warning displayed in BIOS, iDRAC, or on the System LCD.

If a second PSU is added at run-time, in order for that particular PSU to be enabled, the wattage capacity of the first PSU must equal the second PSU. Otherwise, the PSU will be flagged as unmatched in iDRAC and the second PSU will not be enabled.

Dell PSUs have achieved Platinum efficiency levels as shown in the table below.

Table 34. PSU Efficiency Levels

Efficiency Targets by Load						
Form factor	**Output**	**Class**	**10%**	**20%**	**50%**	**100%**
Redundant 60mm	700 W AC	Titanium	90.00%	94.00%	96.00%	91.50%
	800 W AC	Platinum	89.00%	93.00%	94.00%	91.50%
	1100 W AC	Titanium	90.00%	94.00%	96.00%	91.50%
	1100 W -48 VDC	N/A	85.00%	90.00%	92.00%	90.00%
	1400 W AC	Platinum	89.00%	93.00%	94.00%	91.50%
	1800 W AC	Titanium	90.00%	94.00%	96.00%	94.00%

Environmental specifications

NOTE: For additional information about environmental certifications, refer to the *Product Environmental Datasheet* located with the *Documentation* on www.dell.com/support/home.

Table 35. Continuous Operation Specifications for ASHRAE A2

Temperature	Specifications
Allowable operations	
Temperature range for altitudes <= 900 m (<= 2953 ft)	10 to 35°C (50 to 95°F) with no direct sunlight on the platform
Humidity percent range (non-condensing at all times)	8% RH with -12°C minimum dew point to 80% RH with 21°C (69.8°F) maximum dew point
Operational altitude de-rating	Maximum temperature is reduced by 1°C/300 m (1.8°F/984 Ft) above 900 m (2953 Ft)

Table 36. Continuous Operation Specifications for ASHRAE A3

Temperature	Specifications
Allowable operations	
Temperature range for altitudes <= 900 m (<= 2953 ft)	5 to 40°C (41 to 104°F) with no direct sunlight on the equipment
Humidity percent range (non-condensing at all times)	8% RH with -12°C minimum dew point to 85% RH with 24°C (75.2°F) maximum dew point
Operational altitude de-rating	Maximum temperature is reduced by 1°C/175 m (1.8°F/574 Ft) above 900 m (2953 Ft)

Table 37. Continuous Operation Specifications for ASHRAE A4

Temperature	Specifications
Allowable operations	
Temperature range for altitudes <= 900 m (<= 2953 ft)	5 to 45°C (41 to 113°F) with no direct sunlight on the equipment
Humidity percent range (non-condensing at all times)	8% RH with -12°C minimum dew point to 90% RH with 24°C (75.2°F) maximum dew point

Table 37. Continuous Operation Specifications for ASHRAE A4 (continued)

Temperature	Specifications
Operational altitude de-rating	Maximum temperature is reduced by 1°C/125 m (1.8°F/410 Ft) above 900 m (2953 Ft)

Table 38. Common Environmental Specifications

Allowable operations	
Maximum temperature gradient (applies to both operation and non-operation)	20°C in an hour* (36°F in an hour) and 5°C in 15 minutes (9°F in 15 minutes), 5°C in an hour* (9°F in an hour) for tape hardware **NOTE:** * - Per ASHRAE thermal guidelines for tape hardware, these are not instantaneous rates of temperature change.
Non-operational temperature limits	-40 to 65°C (-40 to 149°F)
Non-operational humidity limits	5% to 95% RH with 27°C (80.6°F) maximum dew point
Maximum non-operational altitude	12,000 meters (39,370 feet)
Maximum operational altitude	3,050 meters (10,006 feet)

Table 39. Maximum vibration specifications

Maximum vibration	Specifications
Operating	0.21 G_{rms} at 5 Hz to 500 Hz for 10 minutes (all operation orientations)
Storage	1.88 G_{rms} at 10 Hz to 500 Hz for 15 minutes (all six sides tested)

Table 40. Maximum shock pulse specifications

Maximum shock pulse	Specifications
Operating	Six consecutively executed shock pulses in the positive and negative x, y, and z axis of 6 G for up to 11 ms
Storage	Six consecutively executed shock pulses in the positive and negative x, y, and z axis (one pulse on each side of the system) of 71 G for up to 2 ms

Particulate and gaseous contamination specifications

The following table defines the limitations that help avoid any equipment damage or failure from particulate and gaseous contamination. If the levels of particulate or gaseous pollution exceed the specified limitations and result in equipment damage or failure, you may need to rectify the environmental conditions. Remediation of environmental conditions is the responsibility of the customer.

Table 41. Particulate contamination specifications

Particulate contamination	Specifications
Air filtration	Data center air filtration as defined by ISO Class 8 per ISO 14644-1 with a 95% upper confidence limit **NOTE:** This condition applies to data center environments only. Air filtration requirements do not apply to IT equipment designed to be used outside a data center, in environments such as an office or factory floor. **NOTE:** Air entering the data center must have MERV11 or MERV13 filtration.
Conductive dust	Air must be free of conductive dust, zinc whiskers, or other conductive particles **NOTE:** This condition applies to data center and non-data center environments.

Table 41. Particulate contamination specifications (continued)

Particulate contamination	Specifications
Corrosive dust	• Air must be free of corrosive dust • Residual dust present in the air must have a deliquescent point less than 60% relative humidity **NOTE:** This condition applies to data center and non-data center environments.

Table 42. Gaseous contamination specifications

Gaseous contamination	Specifications
Copper coupon corrosion rate	<300 Å/month per Class G1 as defined by ANSI/ISA71.04-2013
Silver coupon corrosion rate	<200 Å/month as defined by ANSI/ISA71.04-2013

Cooling components

Table 43. Cooling components

Item	Type	Solution Strategy	
Fan	Standard Fan (STD)	All 3.5-inch HDD x 4 Configurations.	
	High Performance Gold Fan (HPR Gold)	for Air Cooling	for Liquid Cooling
		Either one matched in non 3.5-inch Chassis: 2.5-inch x 10 configuration 2.5-inch x 8 and No BP configurations DDR5 RDIMM >128 GB Rear Drives GPU	3.5-inch HDD x 4 config. w/ LC part in QB DDR5 RDIMM >128 GB Rear Drives GPU
CPU HSK	1U EXT. HSK.	All air cooling configurations.	
	DLC Module	For all CPU operation at DLC configurations.	
Shroud	Air Shroud	All air cooling configurations require an air shroud.	
	Air Shroud for 1DPC	New air shroud be required at all air cooling config. w/ 1DPC MB.	
	OCP Shroud	System with OCP card but without riser 2 implemented.	
Blank	DIMM Blank	When CPU > 240 W installed, except DLC configurations.	

Thermal restriction matrix

Table 44. Label reference

Label	Description
STD	Standard performance
HPR Gold	High performance (gold grade)
EXT. HSK.	External Heat sink
LP	Low profile
FH	Full height

Table 44. Label reference (continued)

Label	Description
DLC	Direct liquid cooling

Table 45. Air cooling: Thermal restriction matrix (non-GPU)

Configuration				No BP	8 x 2.5-inch U.2	4 x 3.5-inch		10 x 2.5-inch SAS			10 x 2.5-inch NVMe		16 x E3.S 14 x E3.S 8 x E3.S
Rear storage				No Rear Drives	No Rear Drives	No Rear Drives	E3.S x 2	No Rear Drives	2.5-inch SAS x 2	E3.S x 2	No Rear Drives	E3.S x 2	No Rear Drives
cTDP		Model	Core Count										
CPU TDP/ cTDP	240 W	9334	32	35°C	35°C	35°C	30°C	35°C	35°C	35°C	35°C	35°C	35°C
	240 W	9224	24	35°C	35°C	35°C	30°C	35°C	35°C	35°C	35°C	35°C	35°C
	240 W	9254	24	35°C	35°C	35°C	30°C	35°C	35°C	35°C	35°C	35°C	35°C
	240 W	9124	16	35°C	35°C	35°C	30°C	35°C	35°C	35°C	35°C	35°C	35°C
	300 W	9634	84	35°C	35°C	Not Supported		30°C	30°C	30°C	30°C	30°C	30°C
	300 W	9534	48	35°C	35°C			30°C	30°C	30°C	30°C	30°C	30°C
	300 W	9454/ 9454P	64	35°C	35°C			30°C	30°C	30°C	30°C	30°C	30°C
	300 W	9354/ 9354P	32	35°C	35°C			30°C	30°C	30°C	30°C	30°C	30°C
	400 W	9654/ 9654P	96	30°C	30°C			Require DLC	Not Supported				Not Supported
	400 W	9554/ 9554P	64	Require DLC									
	400 W	9474F	48										
	400 W	9374F	32	30°C	30°C								
	400 W	9274F	21	30°C	30°C								30°C
	400 W	9174F	16	30°C	30°C								30°C
	400 W	9754	128	Require DLC									Not Supported
	400 W	9734	112	30°C	30°C								30°C
	400 W	9684X	96	Require DLC									Not Supported
Memory	16 GB RDIMM			35°C	35°C	35°C	35°C	35°C	35°C	35°C	35°C	35°C	35°C
	32 GB RDIMM			35°C	35°C	35°C	35°C	35°C	35°C	35°C	35°C	35°C	35°C

Table 45. Air cooling: Thermal restriction matrix (non-GPU) (continued)

Configuration				No BP	8 x 2.5-inch U.2	4 x 3.5-inch		10 x 2.5-inch SAS			10 x 2.5-inch NVMe		16 x E3.S 14 x E3.S 8 x E3.S
Rear storage				No Rear Drives	No Rear Drives	No Rear Drives	E3.S x 2	No Rear Drives	2.5-inch SAS x 2	E3.S x 2	No Rear Drives	E3.S x 2	No Rear Drives
cTDP		Model	Core Count										
	64 GB RDIMM			35°C	35°C	35°C	35°C	35°C	35°C	35°C	35°C	35°C	35°C
	128 GB RDIMM			35°C	35°C	35°C	30°C	35°C	35°C	35°C	35°C	35°C	35°C
	256 GB RDIMM			35°C	35°C	30°C	Not Supported	35°C	30°C	30°C	35°C	30°C	35°C

Table 46. Air cooling: Thermal restriction matrix (GPU Configuration)

Configuration		8 x 2.5-inch U.2	4 x 3.5-inch	10 x 2.5-inch	16 x E3.S 14 x E3.S 8 x E3.S
Rear storage		No Rear Drives	No Rear Drives	No Rear Drives	No Rear Drives
cTDP					
CPU TDP/ cTDP	240 W	35°C	30°C	35°C	35°C
	300 W	30°C	Not Supported	30°C	30°C
	400 W	Not Supported			
Memory	16 GB RDIMM	35°C	30°C	35°C	35°C
	32 GB RDIMM	35°C	30°C	35°C	35°C
	64 GB RDIMM	35°C	30°C	35°C	35°C
	128 GB RDIMM	35°C	30°C	35°C	35°C
	256 GB RDIMM	35°C	30°C	35°C	35°C

NOTE: For fan type selection, refer the solution strategy under cooling components.

Thermal air restrictions

Table 47. ASHRAE A3/A4 environment - Air cooling

ASHRAE	ASHRAE A3 / 40C	ASHRAE A4 / 45C
Front Storage	3.5” config. is not supported 2.5” x 10 is not supported NVME not supported E3.S config. is not supported	
Fan type	HPR Gold fans are required	
CPU	CPU TDP > 240 W are not supported	CPU TDP > 200 W are not supported

Table 47. ASHRAE A3/A4 environment - Air cooling (continued)

ASHRAE	ASHRAE A3 / 40C	ASHRAE A4 / 45C
Memory	128 GB and higher capacity RDIMMS are not supported.	
PCIe card	Non-Dell qualified peripheral cards and consuming power greater than 25W are not supported	
GPU	GPU cards are not supported	
Rear storage	Not Supported	
OCP	Support with 85C active optic cable	Not Supported
PSU	Two PSUs are required in redundant mode. System performance may be reduced in the event of a PSU failure	
BOSS-N1	Supported	Not Supported

Table 48. ASHRAE A3/A4 environment - Liquid cooling

ASHRAE	ASHRAE A3 / 40C	ASHRAE A4 / 45C
Front Storage	3.5” config. is not supported NVMe is not supported E3.S config. is not supported	
Fan type	HPR Gold fans are required	
Memory	128 GB and higher capacity RDIMMS are not supported.	
PCIe card	Non-Dell qualified peripheral cards and consuming power greater than 25 W are not supported	
GPU	GPU cards are not supported	
Rear storage	Not Supported	
OCP	Support with 85C active optic cable	Not Supported
PSU	Two PSUs are required in redundant mode. System performance may be reduced in the event of a PSU failure	
BOSS-N1	Supported	Not Supported

15

Appendix B. Standards compliance

The system conforms to the following industry standards.

Table 49. Industry standard documents

Standard	URL for information and specifications
ACPIAdvance Configuration and Power Interface Specification, v2.0c	https://uefi.org/specsandtesttools
Ethernet IEEE 802.3-2005	https://standards.ieee.org/
HDGHardware Design Guide Version 3.0 for Microsoft Windows Server	microsoft.com/whdc/system/platform/pcdesign/desguide/serverdg.mspx
IPMI Intelligent Platform Management Interface, v2.0	intel.com/design/servers/ipmi
DDR5 Memory DDR5 SDRAM Specification	jedec.org/standards-documents/docs/jesd79-4.pdf
PCI Express PCI Express Base Specification Rev. 2.0 and 3.0	pcisig.com/specifications/pciexpress
PMBus Power System Management Protocol Specification, v1.2	http://pmbus.org/Assets/PDFS/Public/PMBus_Specification_Part_I_Rev_1-1_20070205.pdf
SAS Serial Attached SCSI, v1.1	http://www.t10.org/
SATA Serial ATA Rev. 2.6; SATA II, SATA 1.0a Extensions, Rev. 1.2	sata-io.org
SMBIOS System Management BIOS Reference Specification, v2.7	dmtf.org/standards/smbios
TPM Trusted Platform Module Specification, v1.2 and v2.0	trustedcomputinggroup.org
UEFI Unified Extensible Firmware Interface Specification, v2.1	uefi.org/specifications
USB Universal Serial Bus Specification, Rev. 2.7	usb.org/developers/docs

16

Appendix C Additional resources

Table 50. Additional resources

Resource	Description of contents	Location
Installation and Service Manual	This manual, available in PDF format, provides the following information: ● Chassis features ● System Setup program ● System indicator codes ● System BIOS ● Remove and replace procedures ● Diagnostics ● Jumpers and connectors	Dell.com/Support/Manuals
Getting Started Guide	This guide ships with the system, and is also available in PDF format. This guide provides the following information: ● Initial setup steps	Dell.com/Support/Manuals
Rack Installation Guide	This document ships with the rack kits, and provides instructions for installing a server in a rack.	Dell.com/Support/Manuals
System Information Label	The system information label documents the system board layout and system jumper settings. Text is minimized due to space limitations and translation considerations. The label size is standardized across platforms.	Inside the system chassis cover
Quick Resource Locator (QRL)	This code on the chassis can be scanned by a phone application to access additional information and resources for the server, including videos, reference materials, service tag information, and Dell contact information.	Inside the system chassis cover
Enterprise Infrastructure Planning Tool (EIPT)	The Dell online EIPT enables easier and more meaningful estimates to help you determine the most efficient configuration possible. Use EIPT to calculate the power consumption of your hardware, power infrastructure, and storage.	Dell.com/calc